中国认可
国际互认
检测
TESTING
CNAS L0220

Test Report issued under the responsibility of:

intertek
Total Quality. Assured.

TEST REPORT
IEC 62116
Test procedure of islanding prevention measures for utility-interconnected photovoltaic inverters

Report Number.....:	191012003GZU-002
Date of issue.....:	11 Nov., 2019
Total number of pages	17 Pages
Name of Testing Laboratory preparing the Report .....:	Intertek Testing Services Shenzhen Ltd. Guangzhou Branch Block E, No.7-2 Guang Dong Software Science Park, Caipin Road, Guangzhou Science City, GETDD, Guangzhou, China
Applicant's name .....:	Hitachi Hi-Rel Power Electronics Pvt. Ltd.
Address.....:	SM 3 & 4, Sanand – II GIDC, Industrial Estate, Boll Village, Sanand – 382 110, Gujarat, India.
Test specification:	
Standard.....:	IEC 62116:2014
Test procedure .....:	Type approval
Non-standard test method .....:	N/A
Test Report Form No. .....:	IEC62116B
Test Report Form(s) Originator ....:	TÜV SÜD Product Service GmbH
Master TRF.....:	Dated 2017-11-03

Copyright © 2017 IEC System of Conformity Assessment Schemes for Electrotechnical Equipment and Components (IECEE System). All rights reserved.

This publication may be reproduced in whole or in part for non-commercial purposes as long as the IECEE is acknowledged as copyright owner and source of the material. IECEE takes no responsibility for and will not assume liability for damages resulting from the reader's interpretation of the reproduced material due to its placement and context.

If this Test Report Form is used by non-IECEE members, the IECEE/IEC logo and the reference to the CB Scheme procedure shall be removed.

This report is not valid as a CB Test Report unless signed by an approved CB Testing Laboratory and appended to a CB Test Certificate issued by an NCB in accordance with IECEE 02.

General disclaimer:

The test results presented in this report relate only to the object tested.
This report shall not be reproduced, except in full, without the written approval of the Issuing CB Testing Laboratory. The authenticity of this Test Report and its contents can be verified by contacting the NCB, responsible for this Test Report.

Test item description.....	Solar Grid Tied Inverter
Trade Mark.....	HITACHI
Manufacturer	Same as applicant
Model/Type reference	Hiverter Si-3.3K, Hiverter Si-4.4K, Hiverter Si-5K, Hiverter Si-5.5K, Hiverter Si-6.6K, Hiverter Si-8.8K, Hiverter Si-11K, Hiverter Si-12K

Disclaimer: This document is controlled and has been released electronically.
Only the version on the IECEE Website is the current document version

Ratings .....

MODEL	Hiverter Si-3.3K	Hiverter Si-4.4K	Hiverter Si-5K	Hiverter Si-5.5K	Hiverter Si-6.6K
Max PV voltage	1000Vdc				
MPPT Voltage range	160-960Vdc				
Max. input current	11/11A				
PV Isc	14/14A				
Max power (VA)	3300	4400	5000	5500	6600
Max output current	3×4.8 A	3×6.4 A	3×8.0A	3×8.0 A	3×9.6 A
Output voltage	3W/N/PE 230Vac/400Vac				
Nominal Frequency	50 Hz				
Power Factor	0.8 Leading to 0.8 Lagging				
Ambient Temperature	-25℃ - +60℃				
Protection Degree	IP65				
Protection Class	Class I				

MODEL	Hiverter Si-8.8K	Hiverter Si-11K	Hiverter Si-12K
Max PV voltage	1000Vdc		
MPPT Voltage range	160-960Vdc		
Max. input current	11/11A		
PV Isc	14/14A		
Max power (VA)	8800	11000	13200
Max output current	3×12.8 A	3×15.9 A	3×19.1 A
Output voltage	3W/N/PE 230Vac/400Vac		
Nominal Frequency	50 Hz		
Power Factor	0.8 Leading to 0.8 Lagging		
Ambient Temperature	-25℃ - +60℃		
Protection Degree	IP65		
Protection Class	Class I		
Software Version	V 1.00		

Responsible Testing Laboratory (as applicable), testing procedure and testing location(s):			
☒	**CB Testing Laboratory:**	Intertek Testing Services Shenzhen Ltd. Guangzhou Branch	
Testing location/ address.....:		Block E, No.7-2 Guang Dong Software Science Park, Caipin Road, Guangzhou Science City, GETDD, Guangzhou, China	
Tested by (name, function, signature).....:		Tommy Zhong Technical Manager	Tommy
Approved by (name, function, signature)...:		Jason Fu Technical Team Leader	Jason Fu
☐	**Testing procedure: CTF Stage 1:**	N/A	
Testing location/ address.....:		N/A	
Tested by (name, function, signature).....:		N/A	
Approved by (name, function, signature)...:		N/A	
☐	**Testing procedure: CTF Stage 2:**	N/A	
Testing location/ address.....:		N/A	
Tested by (name + signature).....:		N/A	
Witnessed by (name, function, signature) .:		N/A	
Approved by (name, function, signature)...:		N/A	
☐	**Testing procedure: CTF Stage 3:**	N/A	
☐	**Testing procedure: CTF Stage 4:**	N/A	
Testing location/ address.....:		N/A	
Tested by (name, function, signature).....:		N/A	
Witnessed by (name, function, signature) .:		N/A	
Approved by (name, function, signature)...:		N/A	
Supervised by (name, function, signature) :		N/A	

List of Attachments (including a total number of pages in each attachment): N/A	
Summary of testing:	
Tests performed (name of test and test clause): All applicable tests	**Testing location:** Intertek Testing Services Shenzhen Ltd. Guangzhou Branch Block E, No.7-2 Guang Dong Software Science Park, Caipin Road, Guangzhou Science City, GETDD, Guangzhou, China
Summary of compliance with National Differences (List of countries addressed): N/A ☒ **The product fulfils the requirements of IEC 62116:2014**	

Copy of marking plate:

The artwork below may be only a draft. The use of certification marks on a product must be authorized by the respective NCBs that own these marks.

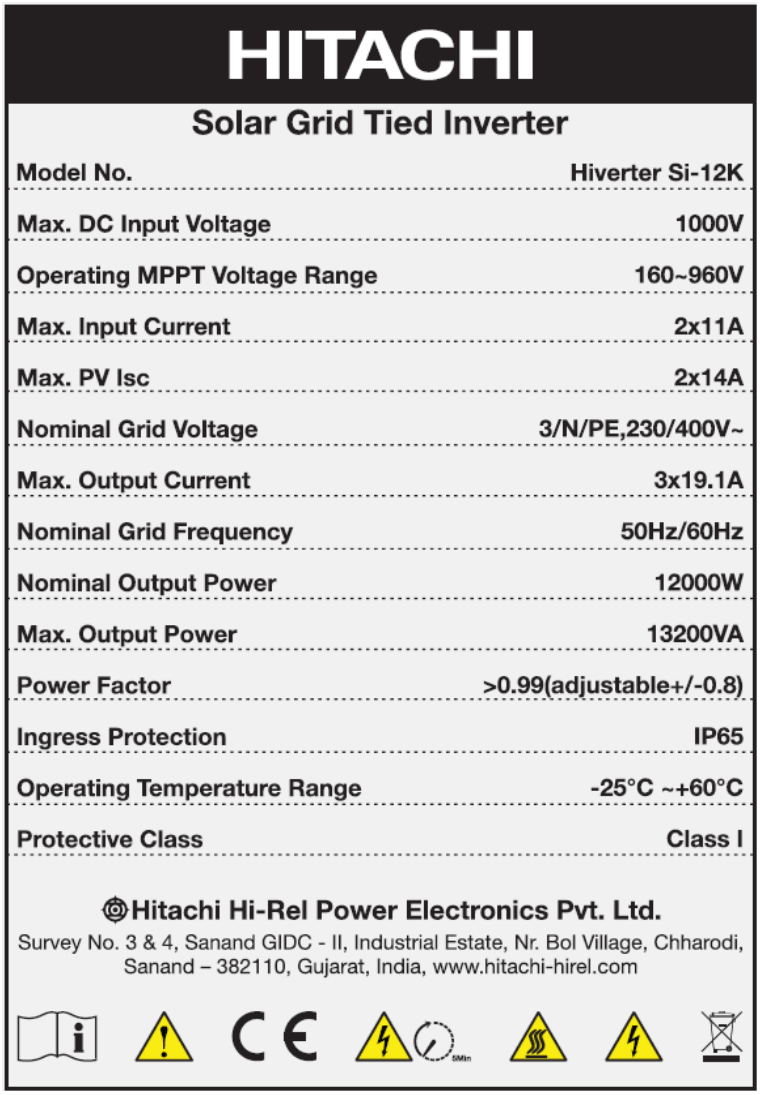

HITACHI

Solar Grid Tied Inverter

Model No.	Hiverter Si-12K
Max. DC Input Voltage	1000V
Operating MPPT Voltage Range	160~960V
Max. Input Current	2x11A
Max. PV Isc	2x14A
Nominal Grid Voltage	3/N/PE,230/400V~
Max. Output Current	3x19.1A
Nominal Grid Frequency	50Hz/60Hz
Nominal Output Power	12000W
Max. Output Power	13200VA
Power Factor	>0.99(adjustable+/-0.8)
Ingress Protection	IP65
Operating Temperature Range	-25°C ~+60°C
Protective Class	Class I

Hitachi Hi-Rel Power Electronics Pvt. Ltd.
Survey No. 3 & 4, Sanand GIDC - II, Industrial Estate, Nr. Bol Village, Chharodi, Sanand – 382110, Gujarat, India, www.hitachi-hirel.com

Note:

1. The above markings are the minimum requirements required by the safety standard. For the final production samples, the additional markings which do not give rise to misunderstanding may be added.
2. Label is attached on the side surface of enclosure and visible after installation
3. The other model labels are identical with label above, except the model name and rating.

Test item particulars.....:	
Classification of installation and use.....:	Fixed and outdoor use
Supply Connection.....:	Permanent connection
.....:	
Possible test case verdicts:	
- test case does not apply to the test object.....:	N/A
- test object does meet the requirement.....:	P (Pass)
- test object does not meet the requirement.....:	F (Fail)
Testing.....:	
Date of receipt of test item .....:	12 Oct., 2019
Date (s) of performance of tests.....:	04 Nov., 2019
General remarks:	

"(See Enclosure #)" refers to additional information appended to the report.
"(See appended table)" refers to a table appended to the report.

Throughout this report a ☐ comma / ☒ point is used as the decimal separator.

This report is based on the report 170707054GZU-002, dated 11 Jul., 2017 Revision 1: 25 Sep., 2018 and changes the applicant, trade mark, product name and model name to apply for a new certificate.

The model Hiverter Si-3.3K, Hiverter Si-4.4K, Hiverter Si-5K, Hiverter Si-5.5K, Hiverter Si-6.6K, Hiverter Si-8.8K, Hiverter Si-11K, Hiverter Si-12K in this report are same as the model SOFAR 3.3KTL-X, SOFAR 4.4KTL-X, SOFAR 5KTL-X, SOFAR 5.5KTL-X, SOFAR 6.6KTL-X, SOFAR 8.8KTL-X, SOFAR 11KTL-X, SOFAR 12KTL-X respectively in the report 170707054GZU-002, dated 11 Jul., 2017 Revision 1: 25 Sep., 2018, except the product name, model name and the trade Mark.

Manufacturer's Declaration per sub-clause 4.2.5 of IECEE 02:	
The application for obtaining a CB Test Certificate includes more than one factory location and a declaration from the Manufacturer stating that the sample(s) submitted for evaluation is (are) representative of the products from each factory has been provided ..... :	☐ **Yes** ☒ **Not applicable**
When differences exist; they shall be identified in the General product information section.	
Name and address of factory (ies) ..... :	Dongguan SOFAR SOLAR Co., Ltd. 1F - 6F, Building E, No. 1 JinQi Road, Bihu Industrial Park, Wulian Village, Fenggang Town, Dongguan City.

General product information:

Product covered by this report is grid-connected PV inverter for indoor or outdoor installation. The connection to the DC input and AC output are through terminal. The structure of the unit complied with the IP 65 requirement.
The inverters intended to operate at ambient temperature -25℃ - +60℃, which will be specified in the user manual, however, the inverters will output full power when operated at 45℃, if operated at high than 45℃ temperature, the output power would be derated

Model difference:

All models have identical mechanical and electrical construction except some parameter of the software architecture in order to control the max output power. The detailed difference as following:

Model	Hiverter Si-8.8K, Hiverter Si-11K, Hiverter Si-12K		Hiverter Si-3.3K, Hiverter Si-4.4K, Hiverter Si-5K, Hiverter Si-5.5K, Hiverter Si-6.6K	
Componets	Specification	Numbers	Specification	Numbers
Inverter Chock	NPS226060*2+NPF226060*1 2.0Φ*2P*42Ts L=0.73mH	3	NPS226060*2 2.2Φ*1P*67Ts L=1.24mH	3
Bus capacitor	75μF/600V	4	75μF/600V	2

Other than special notice, the model Hiverter Si-12K is as the representative test models in this report

IEC62116			
Cl.	Requirement - Test	Result	Verdict
5	**Testing equipment**		**P**
5.1	**Measuring instruments**		P
	Waveform observation shall be measured by a device with memory function	Agilent oscillograph equipped with memory function	P
	The waveform measurement/capture device shall be able to record the waveform from the beginning of the islanding test until the EUT ceases to energize the island.	Waveform caught from the switch open and the EUT cease to energize	P
	For multi-phase EUT, all phases shall be monitored.		P
	The minimum measurement accuracy shall be 1 % or less of rated EUT nominal output voltage		P
	1 % or less of rated EUT output current, real power and reactive power measurements through switch S1 used to determined the circuit balance condition	Less than 1% of the rated EUT output current	P
5.2	**DC power source**		P
5.2.1	DC power source shall provide voltage and current necessary to meet the testing requirement described in Clause 6	Two Topcon PV simulator used	P
5.2.2	PV array simulator		P
	The test shall be conducted at the input voltage defined in Table 2		P
	And the current shall be limited to 1.5 times the rated photovoltaic input current		P
	Except when specified otherwise by the test requirements		P
5.2.3	Current and voltage limited DC power supply with series resistance		N/A
	DC power source used as the EUT input source shall be capable of EUT maximum input power at minimum and maximum EUT input operating voltage		N/A
	Power source should provide adjustable current and voltage limit, set to provide the desired short circuit current and open circuit voltage when combined with the series and shunt resistance.		N/A

IEC62116			
Cl.	Requirement - Test	Result	Verdict
5.2.4	PV array		N/A
	EUT input source shall be capable of EUT maximum input power at minimum and maximum EUT operating voltage		N/A
	Testing is limited to times when the irradiance varies by no more than 2 % over the duration of the test as measured by a silicon type pyranometer or reference device		N/A
5.3	**AC power source**		P
	The utility grid or other AC power source may be used as long as it meets the condition specified in table 4.		P
5.4	**AC loads**		P
	Non-inductive resistors, low loss inductors, and capacitors with low effective series resistance and effective series inductance shall be utilized in the test circuit		P
	Iron core inductors if used, shall not exceed a current THD of 2% when operated at nominal voltage.		P
	Resistor power ratings should be chosen so as to minimize thermally-induced drift in resistance values during the course of the test		P
6	**Test for single or multi-phase inverter**		P
6.1	Test procedure		P
	This test shall be performed with the EUT conditions as in Table 5		P
6.1a	Determine EUT test output power P_{EUT}, to be used from table 5. Test conditions A, B, and C may be performed in any order convenient to testing		P
6.1b	By adjusting the DC input source, operate the EUT at the selected P_{EUT} and measure EUT reactive power, Q_{EUT}		P
	The utility disconnect switch S1 should be closed.		P

IEC62116			
Cl.	Requirement - Test	Result	Verdict
	With no local load connected (that is S2 open so that the RLC load is not connected at this time), and the EUT connected to the utility (S1 is closed),		P
	Turn the EUT on and operate it at the output determined in step a.		P
	Measure the fundamental frequency (50 or 60Hz) real and reactive power flow, P_{AC} and $Q_{AC.}$		P
	The real power should equal P_{AC}. The reactive power Q_{AC} measured in this step is designated Q_{EUT}		P
6.1c	Turn off the EUT and open S1		P
6.1d	Adjust the RLC circuit to have Q_f = 1,0±0,05		P
6.1e	Connect the RLC load configured in step d to the EUT by closing S2		P
	Close S1 and turn the EUT on, making certain that the power output is as determined in step a		P
	Adjust R, L and C as necessary to ensure that the fundamental (50 Hz or 60 Hz) component of current I_{AC} through S1 is 0,0A with tolerance of ±1% of the rated current of the EUT on a steady state basis in each phase		P
6.1f	Open the utility-disconnect switch S1 to initiate the test. Run-on time, t_R shall be recorded as the time between the opening of switch s1 and the point at which the EUT output current drops and remains below 1% of its rated output levels.		P
6.1g	For test condition A in Table 5 (100%), adjust the real load and only one of the reactive load components (either capacitance C, or inductance L) to each of the load imbalance conditions shown in the shaded portion of table 6.		P
	After each adjustment, an island test is run and run-on time is recorded		P
	If any of the recorded run-on times are longer than the one recorded for the rated balance condition (i.e. test f)		P
	Then, the non-shaded parameter combinations also require testing.		P

IEC62116			
Cl.	Requirement - Test	Result	Verdict
	If no run-on time exceeds the one of balance condition, then this part of test sequence is deemed be completed.		P
6.1h	For test conditions B and C, adjust the only one reactive load components (either capacitance C or inductance L may be chosen) by approximately 1% per test, with a total range of 95% to 105% of the operating point as shown in table 7.		P
	After each adjustment, an island test is run and run-on time is recorded.		P
	If run-on times are still increasing at the 95% or 105% points, additional 1% increments shall be taken until run-on times begin decreasing.		P
6.2	**Pass/fail criteria**		P
	An EUT is considered to comply with the requirements for islanding protection when each case of record run-on time is less than 2s or	See appendix table below	P
	Meets the requirements of local codes		P

Specification of the EUT provided by manufacturer

1) Rating	
a) Maximum output power	12000W
b) DC. voltage range	160-1000V
c) DC. current limits	2x11A
d) AC voltage range	207V-253V
e) Frequency range	50Hz
f) AC current limits	3x19.1A
g) Efficiency	98.3%
h) Voltage and frequency trip settings (magnitude and timing)(the most severe condition)	Parameter / Magnitude / Timing Over voltage / 253V / 2s Under voltage / 195V / 2s Over frequency / 52Hz / 200ms Under frequency / 48Hz / 200ms
i) Other software settings	Island trip settings：<2s;
j) Firmware version	V1.00
2) Others	
a) Displays	LCD
b) Temperature range	-25℃ to +60℃
c) Humidity	0~100%
d) Size	446X413X1360mm
e) Weight	22kg

Table 9 – List of tested condition and run on time

No.	PEUT[1] (% of EUT rating)	Reactive load (% of QL in 6.1.d)1)	PAC[2] (% of nominal)	QAC[3] (% of nominal)	Run on time (ms)	PEUT (KW)	Actual Qf	VDC	Remarks[4]
1	100	100	0	0	985	12.102	1.01	800	Test A at BL
2	66	66	0	0	886	7.928	1.02	560	Test B at BL
3	33	33	0	0	896	3.963	1.01	230	Test C at BL
4	100	100	-5	-5	283	12.072	1.03	800	Test A at IB
5	100	100	-5	0	252	12.094	1.02	800	Test A at IB
6	100	100	-5	5	265	12.105	1.01	800	Test A at IB
7	100	100	0	-5	366	12.085	0.98	800	Test A at IB
8	100	100	0	5	188	12.048	1.03	800	Test A at IB
9	100	100	5	-5	203	12.024	0.98	800	Test A at IB
10	100	100	5	0	556	12.066	1.03	800	Test A at IB
11	100	100	5	5	282	12.046	0.99	800	Test A at IB
12	66	66	0	-5	181	7.915	0.98	560	Test B at IB

13	66	66	0	-4	264	7.911	0.98	560	Test B at IB
14	66	66	0	-3	357	7.925	0.99	560	Test B at IB
15	66	66	0	-2	576	7.957	0.99	560	Test B at IB
16	66	66	0	-1	680	7.956	0.99	560	Test B at IB
17	66	66	0	1	371	7.926	1.01	560	Test B at IB
18	66	66	0	2	275	7.917	1.01	560	Test B at IB
19	66	66	0	3	285	7.918	1.02	560	Test B at IB
20	66	66	0	4	552	7.909	1.02	560	Test B at IB
21	66	66	0	5	257	7.919	1.03	560	Test B at IB
22	33	33	0	-5	178	3.921	0.98	230	Test C at IB
23	33	33	0	-4	553	3.904	0.98	230	Test C at IB
24	33	33	0	-3	182	3.932	0.99	230	Test C at IB
25	33	33	0	-2	298	3.935	0.99	230	Test C at IB
26	33	33	0	-1	266	3.927	0.99	230	Test C at IB
27	33	33	0	1	513	3.906	1.01	230	Test C at IB
28	33	33	0	2	392	3.926	1.01	230	Test C at IB
29	33	33	0	3	232	3.925	1.02	230	Test C at IB
30	33	33	0	4	783	3.919	1.02	230	Test C at IB
31	33	33	0	5	235	3.926	1.03	230	Test C at IB

Remark:

1) PEUT: EUT output power
2) PAC: Real power flow at S1 in Figure 1. Positive means power from EUT to utility. Nominal is the 0% test condition value.
3) QAC: Reactive power flow at S1 in Figure 1. Positive means power form EUT to utility. Nominal is the 0% test condition value.
4) BL: Balance condition, IB: Imbalance condition.

Note: test condition A (100%): If any of the recorded run-on times are longer than the one recorded for the rated balance condition, i.e. test procedure 6.1 f), then the non-shaded parameter combinations (no.32~47) also require testing.

Appendix 1: The test table

P_{EUT} 100%, P_{AC} 0%, Q_{AC} 0%, = 985ms

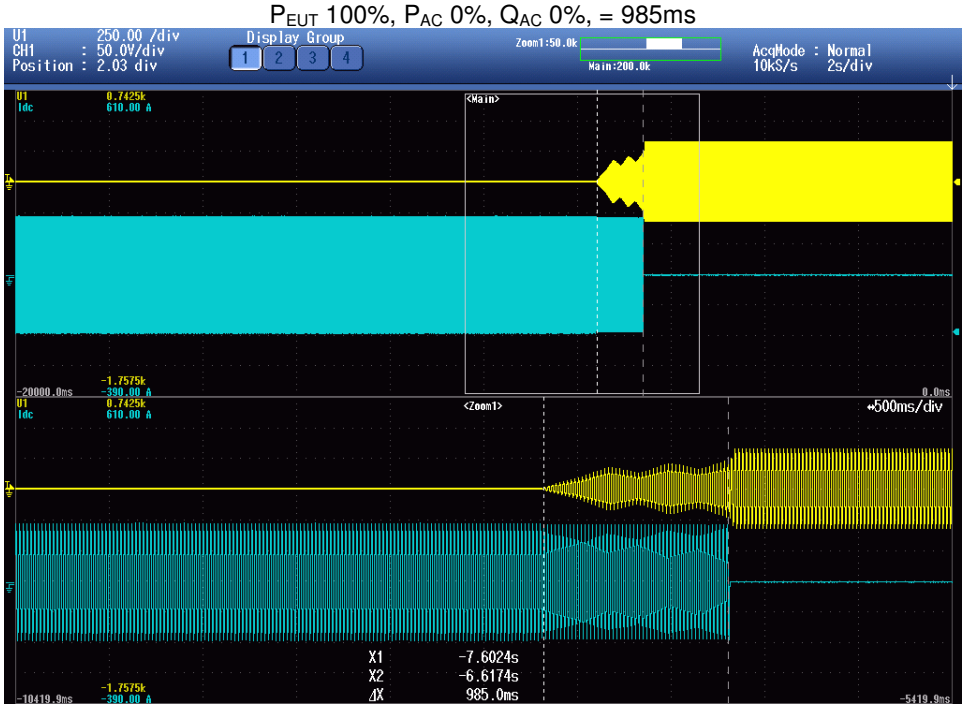

P_{EUT} 66%, P_{AC} 0%, Q_{AC} 0%, = 886ms

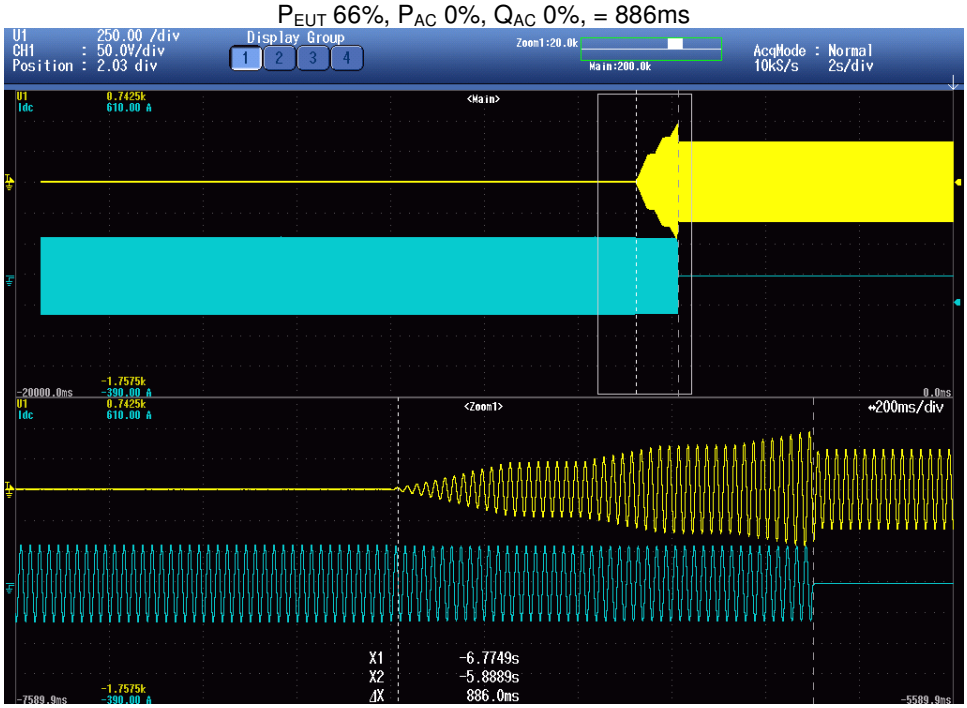

P_{EUT} 33%, P_{AC} 0%, Q_{AC} 0%, = 896ms

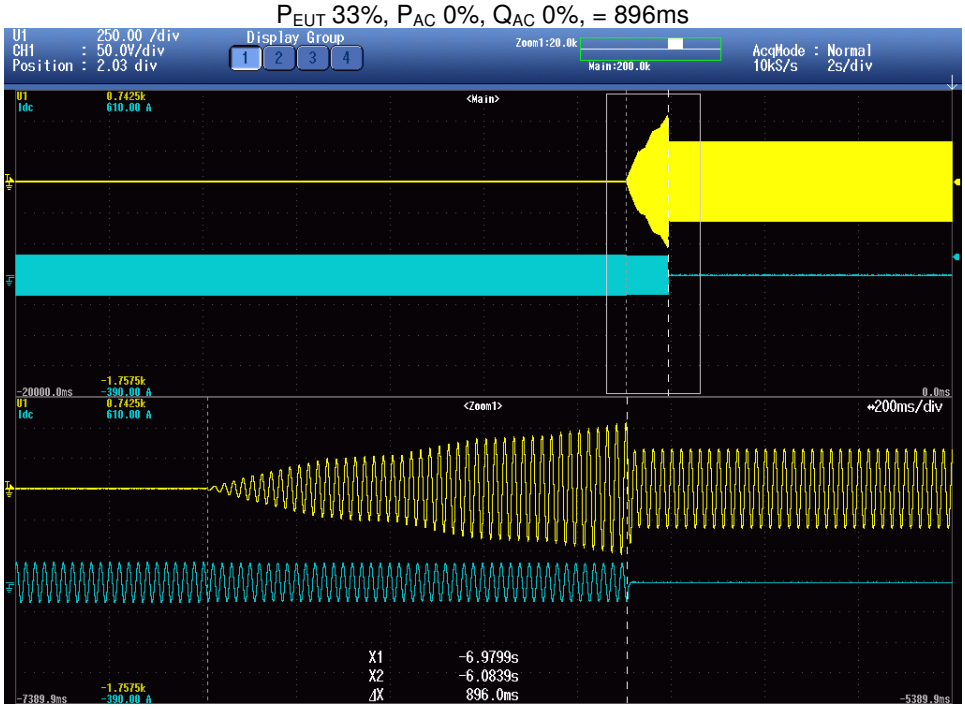

Note: Yellow represents signal trip, Blue represents output current of inverter

Appendix 2: Specifications

Items	Specifications
1) DC power source (or PV array simulator)	
a) Voltage range	0 – 1000Vdc (0.01V step)
b) Current range	0 – 60A (0.01A step)
2) AC power source	
a) Output wiring	Single phase
b) Output capacity	48KVA
c) Output voltage	10-300Vrms
d) Output frequency	45-65Hz
e) Voltage stability	± 100ppm/℃
f) Output voltage distortion	0.05% max.
3) Digital meter	
a) Voltage range	0 – 1000Vdc, 0 – 600Vrms
b) Current range	0 – 30A
c) Frequency range (accuracy)	0.2%
d) Measurement items	Voltage (V) Current (A) Active power (W) Reactive power (Var) Volt-ampere (VA) Power factor (PF) Frequency (Hz) Electric energy (Wh)
4) Waveform recorder	
a) Sampling speed	1000K/s
b) Recording device	Memory record and USB reading
c) Time accuracy	± 500ppm
5) AC load	
a) Resistive load	Maximum voltage: 300Vrms Current range: 0 – 200A (0.001KW step) Capacity: 0-113.33KW
b) Inductive load	Maximum voltage: 300Vrms Current range: 0 – 200A (0.001KVAR step) Capacity: 0-113.33KVA
c) Capacitive load	Maximum voltage: 300Vrms Current range: 0 – 200A (0.001KVAR step) Capacity: 0-113.33KVA

Appendix 3: Block diagram of test circuit

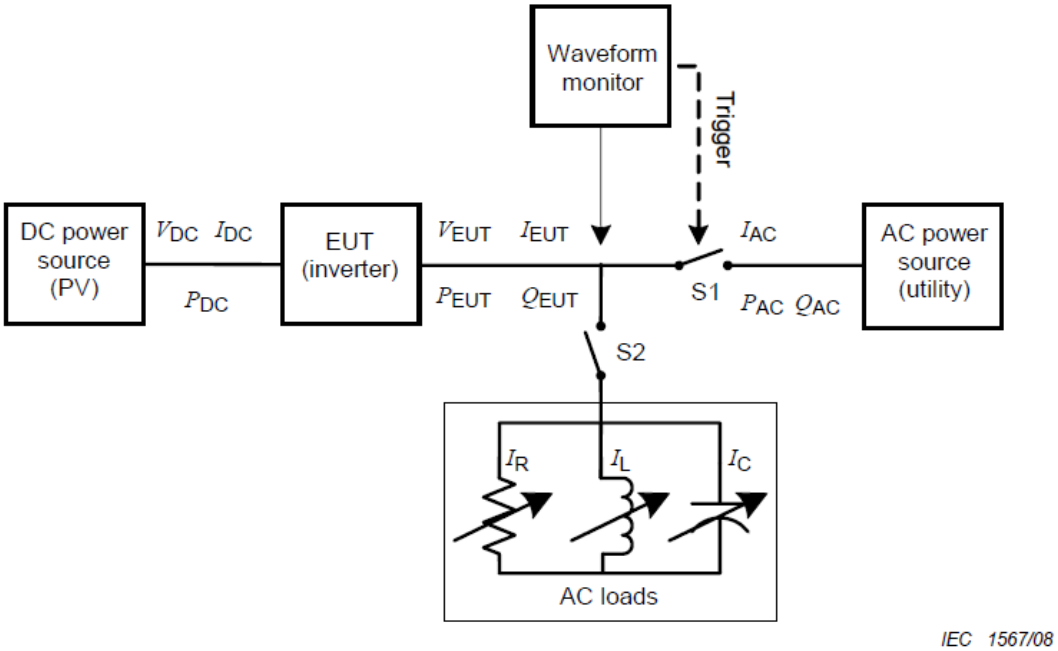

Figure: Test circuit for islanding detection function of inverter

--- End of test report---