中国认可
国际互认
检测
TESTING
CNAS L0220

Test Report issued under the responsibility of:

intertek
Total Quality. Assured.

TEST REPORT
IEC 62109-2
Safety of Power Converter for use in Photovoltaic Power Systems
Part 2: Particular requirements for inverters

Report Number. .....:	191012003GZU-006
Date of issue .....:	19 Nov., 2019
Total number of pages.....	25 pages
Name of Testing Laboratory preparing the Report……:	Intertek Testing Services Shenzhen Ltd. Guangzhou Branch Block E, No.7-2 Guang Dong Software Science Park, Caipin Road, Guangzhou Science City, GETDD, Guangzhou, China
Applicant's name.....:	Hitachi Hi-Rel Power Electronics Pvt. Ltd.
Address .....:	SM 3 & 4, Sanand – II GIDC, Industrial Estate, Boll Village, Sanand – 382 110, Gujarat, India.
Test specification:	
Standard.....:	IEC/EN 62109-2:2011
Test procedure.....:	CE
Non-standard test method……..:	N/A
Test Report Form No.....:	IEC62109_2B
Test Report Form(s) Originator.....:	LCIE - Laboratoire Central des Industries Electriques
Master TRF .....:	Dated 2016-11

Copyright © 2016 IEC System of Conformity Assessment Schemes for Electrotechnical Equipment and Components (IECEE System). All rights reserved.

This publication may be reproduced in whole or in part for non-commercial purposes as long as the IECEE is acknowledged as copyright owner and source of the material. IECEE takes no responsibility for and will not assume liability for damages resulting from the reader's interpretation of the reproduced material due to its placement and context.

If this Test Report Form is used by non-IECEE members, the IECEE/IEC logo and the reference to the CB Scheme procedure shall be removed.

This report is not valid as a CB Test Report unless signed by an approved CB Testing Laboratory and appended to a CB Test Certificate issued by an NCB in accordance with IECEE 02.

General disclaimer:

The test results presented in this report relate only to the object tested.
This report shall not be reproduced, except in full, without the written approval of the Issuing CB Testing Laboratory. The authenticity of this Test Report and its contents can be verified by contacting the NCB, responsible for this Test Report.

Test item description .....:	Solar Grid-tied Inverter
Trade Mark .....:	HITACHI
Manufacturer.....:	Same as applicant
Model/Type reference.....:	Hiverter Si-3.3K, Hiverter Si-4.4K, Hiverter Si-5K, Hiverter Si-5.5K, Hiverter Si-6.6K, Hiverter Si-8.8K, Hiverter Si-11K, Hiverter Si-12K

Ratings .....

MODEL	Hiverter Si-3.3K	Hiverter Si-4.4K	Hiverter Si-5K	Hiverter Si-5.5K	Hiverter Si-6.6K
Max PV voltage	1000Vdc				
MPPT Voltage range	160-960Vdc				
Max. input current	11/11A				
PV Isc	14/14A				
Max power (VA)	3300	4400	5000	5500	6600
Max output current	3×4.8 A	3×6.4 A	3×8.0A	3×8.0 A	3×9.6 A
Output voltage	3W/N/PE 230Vac/400Vac				
Nominal Frequency	50 Hz				
Power Factor	0.8 Leading to 0.8 Lagging				
Ambient Temperature	-25℃ - +60℃				
Protection Degree	IP65				
Protection Class	Class I				

MODEL	Hiverter Si-8.8K	Hiverter Si-11K	Hiverter Si-12K
Max PV voltage	1000Vdc		
MPPT Voltage range	160-960Vdc		
Max. input current	11/11A		
PV Isc	14/14A		
Max power (VA)	8800	11000	13200
Max output current	3×12.8 A	3×15.9 A	3×19.1 A
Output voltage	3W/N/PE 230Vac/400Vac		
Nominal Frequency	50 Hz		
Power Factor	0.8 Leading to 0.8 Lagging		
Ambient Temperature	-25℃ - +60℃		
Protection Degree	IP65		
Protection Class	Class I		
Software Version	V 1.00		

Responsible Testing Laboratory (as applicable), testing procedure and testing location(s):			
☒	**Testing Laboratory:**	Intertek Testing Services Shenzhen Ltd. Guangzhou Branch	
Testing location/ address ..... :		Block E, No.7-2 Guang Dong Software Science Park, Caipin Road, Guangzhou Science City, GETDD, Guangzhou, China	
Tested by (name, function, signature)..... :		Tommy Zhong Technical Manager	
Approved by (name, function, signature)... :		Jason Fu Technical Team Leader	
☐	**Testing procedure: CTF Stage 1:**	N/A	
Testing location/ address ..... :		N/A	
Tested by (name, function, signature)..... :		N/A	
Approved by (name, function, signature)... :		N/A	
☐	**Testing procedure: CTF Stage 2:**	N/A	
Testing location/ address ..... :		N/A	
Tested by (name + signature)..... :		N/A	
Witnessed by (name, function, signature) . :		N/A	
Approved by (name, function, signature)... :		N/A	
☐	**Testing procedure: CTF Stage 3:**	N/A	
☐	**Testing procedure: CTF Stage 4:**	N/A	
Testing location/ address ..... :		N/A	
Tested by (name, function, signature)..... :		N/A	
Witnessed by (name, function, signature) . :		N/A	
Approved by (name, function, signature)... :		N/A	
Supervised by (name, function, signature) :		N/A	

List of Attachments (including a total number of pages in each attachment): **N/A**	
Summary of testing:	
Tests performed (name of test and test clause): All applicable tests	**Testing location:** Intertek Testing Services Shenzhen Ltd. Guangzhou Branch Block E, No.7-2 Guang Dong Software Science Park, Caipin Road, Guangzhou Science City, GETDD, Guangzhou, China
Summary of compliance with National Differences (List of countries addressed): **N/A** ☒ **The product fulfils the requirements of** IEC/EN 62109-2:2011	

Copy of marking plate:

The artwork below may be only a draft. The use of certification marks on a product must be authorized by the respective NCBs that own these marks.

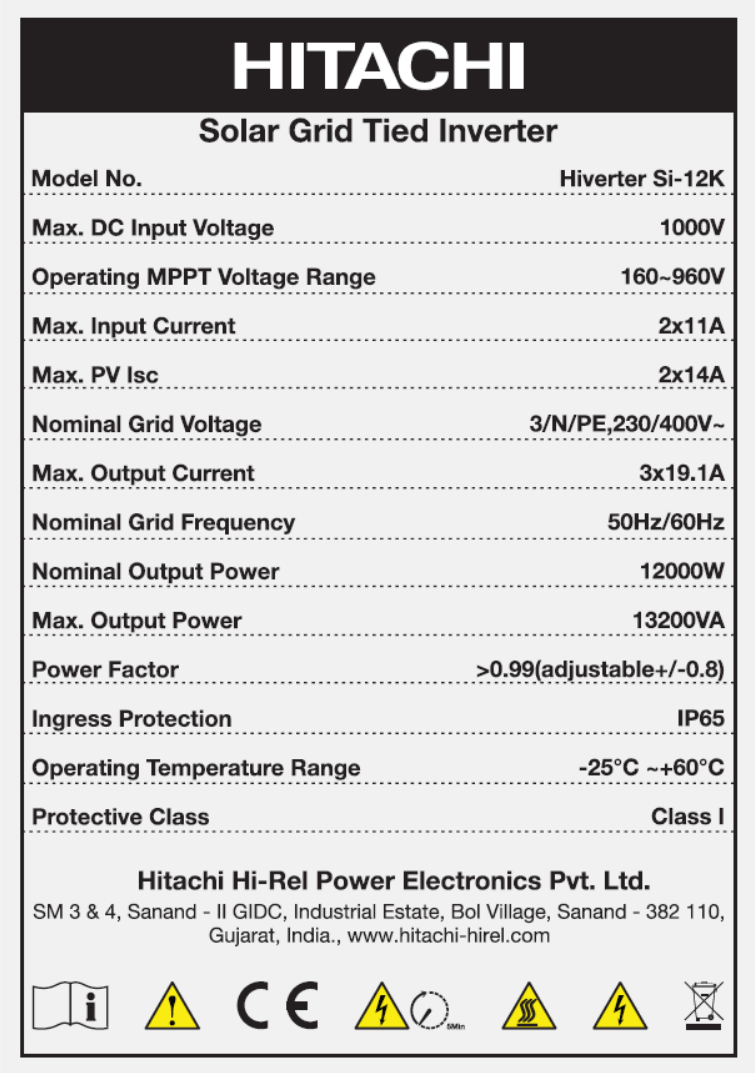

HITACHI

Solar Grid Tied Inverter

Model No.	Hiverter Si-12K
Max. DC Input Voltage	1000V
Operating MPPT Voltage Range	160~960V
Max. Input Current	2x11A
Max. PV Isc	2x14A
Nominal Grid Voltage	3/N/PE,230/400V~
Max. Output Current	3x19.1A
Nominal Grid Frequency	50Hz/60Hz
Nominal Output Power	12000W
Max. Output Power	13200VA
Power Factor	>0.99(adjustable+/-0.8)
Ingress Protection	IP65
Operating Temperature Range	-25°C ~+60°C
Protective Class	Class I

Hitachi Hi-Rel Power Electronics Pvt. Ltd.
SM 3 & 4, Sanand - II GIDC, Industrial Estate, Bol Village, Sanand - 382 110, Gujarat, India., www.hitachi-hirel.com

Note:

1. The above markings are the minimum requirements required by the safety standard. For the final production samples, the additional markings which do not give rise to misunderstanding may be added.
2. Label is attached on the side surface of enclosure and visible after installation.
3. The other model labels are identical with label above, except the model name and rating.

Test item particulars.....:	
Equipment mobility .....:	☐ **movable** ☐ **hand-held** ☐ **stationary** ☒ **fixed** ☐ **transportable** ☐ **for building-in**
Connection to the mains .....:	☐ **pluggable equipment** ☐ **direct plug-in** ☒ **permanent connection** ☐ **for building-in**
Enviromental category.....:	☒ **outdoor** ☐ **indoor unconditional** ☐ **indoor conditional**
Over voltage category Mains .....:	☐ **OVC I** ☐ **OVC II** ☒ **OVC III** ☐ **OVC IV**
Over voltage category PV.....:	☐ **OVC I** ☒ **OVC II** ☐ **OVC III** ☐ **OVC IV**
Mains supply tolerance (%).....:	**-90** / **+110 %**
Tested for power systems.....:	TN systems
IT testing, phase-phase voltage (V) .....:	**- - -**
Class of equipment.....:	☒ **Class I** ☐ **Class II** ☐ **Class III** ☐ **Not classified**
Mass of equipment (kg).....:	Max. 22kg
Pollution degree.....:	Outside PD3; Inside PD2
IP protection class.....:	IP 65
.....:	
Possible test case verdicts:	
- test case does not apply to the test object .....:	N/A
- test object does meet the requirement.....:	P (Pass)
- test object does not meet the requirement .....:	F (Fail)
Testing .....:	
Date of receipt of test item .....:	12 Oct., 2019
Date (s) of performance of tests .....:	12 Oct., 2019 – 11 Nov., 2019
General remarks:	

"(See Enclosure #)" refers to additional information appended to the report.
"(See appended table)" refers to a table appended to the report.

Throughout this report a ☐ comma / ☒ point is used as the decimal separator.

This report is based on the report 191012003GZU-004, dated 11 Nov., 2019 and changes the applicant, trade mark and model name to apply for a new certificate.

The model Hiverter Si-3.3K, Hiverter Si-4.4K, Hiverter Si-5K, Hiverter Si-5.5K, Hiverter Si-6.6K, Hiverter Si-8.8K, Hiverter Si-11K, Hiverter Si-12K in this report are same as the model SOFAR 3.3KTL-X, SOFAR 4.4KTL-X, SOFAR 5KTL-X, SOFAR 5.5KTL-X, SOFAR 6.6KTL-X, SOFAR 8.8KTL-X, SOFAR 11KTL-X, SOFAR 12KTL-X respectively in the report 191012003GZU-004, except the model name and the trade Mark.

This report shall be used together with report 191012003GZU-005.

Manufacturer's Declaration per sub-clause 4.2.5 of IECEE 02:

The application for obtaining a CB Test Certificate includes more than one factory location and a declaration from the Manufacturer stating that the sample(s) submitted for evaluation is (are) representative of the products from each factory has been provided .....:	☐ **Yes** ☒ **Not applicable**

When differences exist; they shall be identified in the General product information section.

Name and address of factory (ies) : Dongguan SOFAR SOLAR Co., Ltd.

1F-6F, Building E, No.1 JinQi Road, Bihu Industrial Park, Wulian Village, Fenggang Town, Dongguan City

General product information:

Product covered by this report is grid-connected PV inverter for indoor or outdoor installation. The connection to the DC input and AC output are through terminal. The structure of the unit complied with the IP 65 requirement. The inverters intended to operate at ambient temperature -25℃ - +60℃, which will be specified in the user manual, however, the inverters will output full power when operated at 45℃, if operated at high than 45℃ temperature, the output power would be derated.

The topology diagram as following:

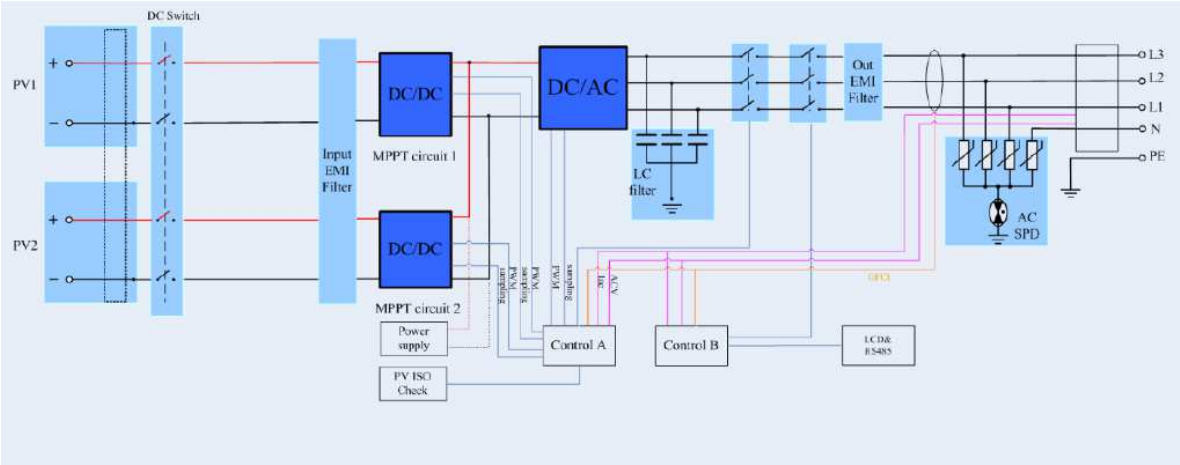

Model differences:

All models have identical mechanical and electrical construction except some parameter of the software architecture in order to control the max output power. The detailed difference as following:

Model	Hiverter Si-8.8K, Hiverter Si-11K, Hiverter Si-12K		Hiverter Si-3.3K, Hiverter Si-4.4K, Hiverter Si-5K, Hiverter Si-5.5K, Hiverter Si-6.6K	
Componets	Specification	Numbers	Specification	Numbers
Inverter Chock	NPS226060*2+NPF226060*1 2.0Φ*2P*42Ts L=0.73mH	3	NPS226060*2 2.2Φ*1P*67Ts L=1.24mH	3
Bus capacitor	75μF/600V	4	75μF/600V	2

Other than special notice, the model Hiverter Si-12K is as the representative test models in this report.

IEC 62109-2			
Clause	Requirement + Test	Result - Remark	Verdict
4	**GENERAL TESTING REQUIREMENTS**		P
4.4.4	**Single fault conditions to be applied**		P
4.4.4.15	**Fault-tolerance of protection for grid-interactive inverters**		P
4.4.4.15.1	**Fault-tolerance of residual current monitoring according to 4.8.3.5: the residual current monitoring system operates properly**	**See appended table 4.4.4.15.1**	P
	a)..- The inverter ceases to operate		P
	- Indicates a fault in accordance with §13.9		P
	- Disconnect from the mains		P
	- not re-connect after any sequence of removing and reconnecting PV power		P
	- not re-connect after any sequence of removing and reconnecting AC power		P
	- not re-connect after any sequence of removing and reconnecting both PV and AC power		P
	b)..- The inverter continues to operate		N/A
	- the residual current monitoring system operates properly under single fault condition		N/A
	- Indicates a fault in accordance with §13.9		N/A
	c)..- The inverter continues to operate regardless of loss of residual current monitoring functionality		N/A
	- not re-connect after any sequence of removing and reconnecting PV power		N/A
	- not re-connect after any sequence of removing and reconnecting AC power		N/A
	- not re-connect after any sequence of removing and reconnecting both PV and AC power		N/A
	- Indicates a fault in accordance with §13.9		N/A
4.4.4.15.2	**Fault-tolerance of automatic disconnecting means**	Two series relays in each line and may independent operation for each relay.	P
4.4.4.15.2.1	**The means provided for automatic disconnection of a grid-interactive inverter from the mains shall:**		P
	- disconnect all grounded current-carrying conductors from the mains	Disconnected all line conductors from the mains	P
	- disconnect all ungrounded current-carrying conductors from the mains		P
	- be such that with a single fault applied to the disconnection means or to any other location in the inverter, at least basic insulation or simple separation is maintained between the PV array and the mains when the disconnecting means is intended to be in the open state.	See appended table 4.4.4.15.2 Fault-tolerance of automatic disconnecting There are two relays in serial used as automatic disconnection means. Contact gap is >1.5 mm for each relay.	P
4.4.4.15.2.2	**Design of insulation or separation complies with requirements of 7.3.7 of Part 1: report here Part 1 comment and verdict.**	The automatic disconnection means is automatically checked before the inverter	P

IEC 62109-2			
Clause	Requirement + Test	Result - Remark	Verdict
		start operation	
4.4.4.15.2.3	**For non-isolated inverter, automatic checking of the isolation provided by a disconnect means after single fault.**	**See appended test table 4.4.4.15.2 Fault-tolerance of automatic disconnecting.**	P
	If the check fail: - any still-functional disconnection means shall be left in the open position		P
	- at least basic or simple separation shall be maintained between the PV input and the mains		P
	- the inverter shall not start operation		P
	- the inverter shall indicate a fault in accordance with 13.9	The screen shown error information.	P
4.4.4.16	**A stand-alone inverter with a transfer switch to transfer AC loads from the mains or other AC bypass source to the inverter output:**	No such transfer switch	N/A
	- shall continue to operate normally		N/A
	- shall not present a risk of fire as the result of an out-of-phase transfer		N/A
	- shall not present a risk of shock as the result of an out-of-phase transfer		N/A
	- And having control preventing switching: components for malfunctioning ……..…:		N/A
4.4.4.17	**Cooling system failure – Blanketing test** **No hazards according to the criteria of sub-clause 4.4.3 of Part 1 shall result from blanketing the inverter** **This test is not required for inverters restricted to use only in closed electrical operating areas.**	**See appended test table Cooling system failure – Blanketing test.**	P
	Test stop condition: time duration value or stabilized temperature ……..:		P
4.7	**ELECTRICAL RATINGS TESTS**		P
4.7.4	**Stand-alone Inverter AC output voltage and frequency**		N/A
4.7.4.1	**General**		N/A
4.7.4.2	**Steady state output voltage at nominal DC input** **The steady-state AC output voltage shall not be less than 90 % or more than 110 % of the rated nominal voltage with the inverter supplied with its nominal value of DC input voltage.**		N/A
4.7.4.3	**Steady state output voltage across the DC input range** **The steady-state AC output voltage shall not be less than 85 % or more than 110 % of the rated nominal voltage with the inverter supplied with any value within the rated range of DC input voltage.**		N/A
4.7.4.4	**Load step response of the output voltage at nominal DC input** **The AC output voltage shall not be less than 85 % or more than 110 % of the rated nominal voltage for more than 1,5 s after application or removal of a resistive load.**		N/A
4.7.4.5	**Steady state output frequency** **The steady-state AC output frequency shall not vary**		N/A

IEC 62109-2			
Clause	Requirement + Test	Result - Remark	Verdict
	from the nominal value by more than +4 % or –6 %.		
4.7.5	**Stand-alone inverter output voltage waveform**		N/A
4.7.5.1	**General**		N/A
4.7.5.2	**The AC output voltage waveform of a sinusoidal output stand-alone inverter shall have a total harmonic distortion (THD) not exceeding of 10 % and no individual harmonic at a level exceeding 6 %.**		N/A
4.7.5.3	**Non-sinusoidal output waveform requirements**		N/A
4.7.5.3.1	**General**		N/A
4.7.5.3.2	**The total harmonic distortion (THD) of the voltage waveform shall not exceed 40 %.**		N/A
4.7.5.3.3	**The slope of the rising and falling edges of the positive and negative half-cycles of the voltage waveform shall not exceed 10 V/µs measured between the points at which the waveform has a voltage of 10 % and 90 % of the peak voltage for that half-cycle.**		N/A
4.7.5.3.4	**The absolute value of the peak voltage of the positive and negative half-cycles of the waveform shall not exceed 1,414 times 110 % of the RMS value of the rated nominal AC output voltage.**		N/A
4.7.5.4	**Information requirements for non-sinusoidal waveforms** **The instructions provided with a stand-alone inverter not complying with 4.7.5.2 shall include the information in 5.3.2.6.**		N/A
4.7.5.5	**Output voltage waveform requirements for inverters for dedicated loads.** **For an inverter that is intended only for use with a known dedicated load, the following requirements may be used as an alternative to the waveform requirements in 4.7.5.2 to 4.7.5.3.**		N/A
	The combination of the inverter and dedicated load shall be evaluated to ensure that the output waveform does not cause any hazards in the load equipment and inverter, or cause the load equipment to fail to comply with the applicable product safety standards.		N/A
	The inverter shall be marked with symbols 9 and 15 of Table C.1 of Part 1.		N/A
	The installation instructions provided with the inverter shall include the information in 5.3.2.13.		N/A
4.8	**ADDITIONAL TESTS FOR GRID-INTERACTIVE INVERTERS**		P
4.8.1	**General requirements regarding inverter isolation and array grounding**	Non-isolation inverter	N/A
	- Type of Array grounding supported ……:		N/A
	- Inverter isolation ……..:		N/A
4.8.2	**Array insulation resistance detection for inverters for ungrounded and functionally grounded arrays**	**(See attached table)**	P
4.8.2.1	**Array insulation resistance detection for inverters for ungrounded arrays**		P
	Inverter shall have means to measure DC insulation resistance from PV input (array) to ground before starting		P

IEC 62109-2			
Clause	Requirement + Test	Result - Remark	Verdict
	operation		
	Or Inverter shall be provided with instruction in accordance with 5.3.2.11.	The inverter can measure DC insulation resistance from PV input array to ground before starting operation	N/A
	Measured DC insulation resistance: ……:		P
	Inverter measurement circuit shall be capable of detecting insulation resistance below the limit value R= Vmax/30mA under normal conditions		P
	Inverter measurement circuit shall be capable of detecting insulation resistance below the limit value R= Vmax/30mA with ground fault in the PV array		P
	Isolated inverters shall indicate a fault if the insulation resistance is less than the limit value		N/A
	Isolated inverter fault indication maintained until insulation resistance has recovered to a value higher than the limit value		N/A
	Non-isolated inverters, or inverters with isolation not complying with the leakage current limits in the minimum inverter isolation requirements in Table 30:		P
	- shall indicate a fault in accordance with 13.9		P
	- shall not connect to the mains		P
4.8.2.2	**Array insulation resistance detection for inverters for functionally grounded arrays**		N/A
	a-1)The value of the total resistance, including the intentional resistance for array functional grounding, the expected insulation resistance of the array to ground, and the resistance of any other networks connected to ground (for example measurement networks) must not be lower than R = (VMAX PV/30 mA) ohms.		N/A
	a-2) The installation instructions shall include the information required in 5.3.2.12.		N/A
	b-1) As an alternative to a), or if a resistor value lower than in a) is used, the inverter shall incorporate means to detect, during operation, if the total current through the resistor and any networks (for example measurement networks) in parallel with it, exceeds the residual current values and times in Table 31		N/A
	b-2) Inverter shall either disconnect the resistor or limit the current by other means ……:		N/A
	b-3) If the inverter is a non-isolated inverter, or has isolation not complying with the leakage current limits in the minimum inverter isolation requirements in Table 30, it shall also disconnect from the mains.		N/A
	c) The inverter shall have means to measure the DC insulation resistance from the PV input to ground before starting operation, in accordance with 4.8.2.1.		N/A
4.8.3	**Array residual current detection**		P
4.8.3.1	**General**		P
4.8.3.2	**30 mA touch current type test for isolated inverters**		N/A
4.8.3.3	**Fire hazard residual current type test for isolated inverters**		N/A

IEC 62109-2			
Clause	Requirement + Test	Result - Remark	Verdict
4.8.3.4	**Protection by application of RCD's**	Integrated RCM inside PCE	P
	- The requirement for additional protection in 4.8.3.1 can be met by provision of an RCD with a residual current setting of 30 mA, located between the inverter and the mains..		P
	- The selection of the RCD type to ensure compatibility with the inverter must be made according to rules for RCD selection in Part 1.		P
	- The RCD provided integral to the inverter, or		P
	- The RCD provided by the installer if details of the rating, type, and location for the RCD are given in the installation instructions per 5.3.2.9.		N/A
4.8.3.5	**Protection by residual current monitoring**		P
4.8.3.5.1	**General**		P
	Where required by Table 30, the inverter shall provide residual current monitoring that functions whenever the inverter is connected to the mains with the automatic disconnection means closed.		P
	The residual current monitoring means shall measure the total (both a.c. and d.c. components) RMS current.		P
	As indicated in Table 30 for different inverter types, array types, and inverter isolation levels, detection may be required for excessive continuous residual current, excessive sudden changes in residual current, or both, according to the following limits:		P
	a) Continuous residual current: The inverter shall disconnect within 0,3 s and indicate a fault in accordance with 13.9 if the continuous residual current exceeds:		P
	- maximum 300 mA for inverters with continuous ouput power rating ≤30kV;		P
	- maximum 10 mA per kVA of rated continuous output power for inverters with continuous output power rating > 30 kVA.		N/A
	The inverter may attempt to re-connect if the array insulation resistance meets the limit in 4.8.2.		P
	b) Sudden changes in residual current: The inverter shall disconnect from the mains within the time specified in Table 31		P
	The inverter indicates a fault in accordance with 13.9, if a sudden increase in the RMS residual current is detected exceeding the value in the table.		P
	The inverter may attempt to re-connect if the array insulation resistance meets the limit in 4.8.2.		P
4.8.3.5.2	**Test for detection of excessive continuous residual current: test repeated 5 times and time to disconnect shall not exceed 0,3 s.**	**See appended test table 4.8.3.5.2 Test for detection of excessive continuous residual current**	P
4.8.3.5.3	**Test for detection of sudden changes in residual current repeated 5 times and each of the 5 results shall not exceed the time limit indicated in for each row (30mA, 60mA and150mA) of Table 31.**		P

IEC 62109-2			
Clause	Requirement + Test	Result - Remark	Verdict
4.8.3.6	**Systems located in closed electrical operating areas**		N/A
	The protection against shock hazard is not required if the installation information provided with the inverter indicates the restriction for use in a closed electrical operating area, and		N/A
	Installation information indicates what forms of shock hazard protection are and are not provided integral to the inverter, in accordance with 5.3.2.7.		N/A
	The inverter shall be marked as in 5.2.2.6.		N/A
5	**MARKING AND DOCUMENTATION**		P
5.1	**Marking**		P
5.1.4	**Equipment ratings**		P
	PV input ratings:	See below	P
	- Vmax PV (absolute maximum) (d.c. V)	1000 d.c. V	P
	- Isc PV (absolute maximum) (d.c. A)		P
	a.c. output ratings:		P
	- Voltage (nominal or range) (a.c. V)		P
	- Current (maximum continuous) (a.c. A)		P
	- Frequency (nominal or range) (Hz)	50Hz	P
	- Power (maximum continuous) (W or VA)		P
	- Power factor range	0.80 lead-0.80 lag	P
	a.c input ratings:		N/A
	- Voltage (nominal or range) (a.c. V)		N/A
	- Current (maximum continuous) (a.c. A)		N/A
	- Frequency (nominal or range) (Hz)		N/A
	d.c input (other than PV) ratings:		N/A
	- Voltage (nominal or range) (d.c. V)		N/A
	- Current (maximum continuous) (d.c. A)		N/A
	d.c. output ratings:		N/A
	- Voltage (nominal or range) (d.c. V)		N/A
	- Current (maximum continuous) (d.c. A)		N/A
	Protective class (I or II or III)	Class I	P
	Ingress protection (IP) rating per part 1	IP 65	P
	An inverter that is adjustable for more than one nominal output voltage shall be marked to indicate the particular voltage for which it is set when shipped from the factory.		N/A
5.2	**Warning markings**		P
5.2.2	**Content for warning markings**		P
5.2.2.6	**Inverters for closed electrical operating areas**		N/A
	Where required by 4.8.3.6, an inverter not provided with full protection against shock hazard on the PV array shall be marked with a warning that the inverter is only for use in a closed electrical operating area, and referring to the installation instructions.		N/A
5.3	**Documentation**		P
5.3.2	**Information related to installation**		P

IEC 62109-2			
Clause	Requirement + Test	Result - Remark	Verdict
5.3.2.1	**Ratings. Subclause 5.3.2 of Part 1 requires the documentation to include ratings information for each input and output. For inverters this information shall be as in Table 33 below. Only those ratings that are applicable based on the type of inverter are required.**		P
	PV input quantities :		P
	- Vmax PV (absolute maximum) (d.c. V)		P
	- PV input operating voltage range (d.c. V)		P
	- Maximum operating PV input current (d.c. A)		P
	- Isc PV (absolute maximum) (d.c. A)		P
	- Isc PV (absolute maximum) (d.c. A)		P
	- Max. inverter backfeed current to the array (a.c. or d.c. A)		P
	a.c. output quantities:		P
	- Voltage (nominal or range) (a.c. V)		P
	- Current (maximum continuous) (a.c. A)		P
	- Current (inrush) (a.c. A, peak and duration)		P
	- Frequency (nominal or range) (Hz)		P
	- Power (maximum continuous) (W or VA)		P
	- Power factor range		P
	- Maximum output fault current (a.c. A, peak and duration or RMS)		P
	- Maximum output overcurrent protection (a.c. A)		P
	a.c. input quantities:		N/A
	- Voltage (nominal or range) (a.c. V)		N/A
	- Current (maximum continuous) (a.c. A)		N/A
	- Current (inrush) (a.c. A, peak and duration)		N/A
	- Frequency (nominal or range) (Hz)		N/A
	d.c input (other than PV) quantities:		N/A
	- Voltage (nominal or range) (d.c. V)		N/A
	- Nominal battery voltage (d.c. V)		N/A
	- Current (maximum continuous) (d.c. A)		N/A
	d.c. output quantities:		N/A
	- Voltage (nominal or range) (d.c. V)		N/A
	- Nominal battery voltage (d.c. V)		N/A
	- Current (maximum continuous) (d.c. A)		N/A
	Protective class (I or II or III)		P
	Ingress protection (IP) rating per part 1		P
5.3.2.2	**Grid-interactive inverter setpoints**		P
	For a grid-interactive unit with field adjustable trip points, trip times, or reconnect times, the presence of such controls, the means for adjustment, the factory default values, and the limits of the ranges of adjustability shall be provided in the documentation for the PCE or in other format such as on a website. Provided solution: ……..		P
	The setting of field adjustable setpoints shall be accessible from the PCE		P
5.3.2.3	**Transformers and isolation**		N/A

IEC 62109-2			
Clause	Requirement + Test	Result - Remark	Verdict
	whether an internal isolation transformer is provided, and if so, what level of insulation (functional, basic, reinforced, or double) is provided by that transformer. The instructions shall also indicate what the resulting installation requirements are regarding such things as earthing or not earthing the array, providing external residual current detection devices, etc.		N/A
	An inverter shall be provided with information to the installer regarding:		N/A
	- providing of internal isolation transformer		N/A
	- the level of insulation (functional, basic, reinforced, or double)		N/A
	The instructions shall also indicate what the resulting installation requirements are regarding:		N/A
	- earthing or not earthing the array		N/A
	- providing external residual current detection devices		N/A
	- requiring an external isolation transformer,		N/A
5.3.2.4	**Transformers required but not provided**		N/A
	An inverter that requires an external isolation transformer not provided with the unit, shall be provided with instructions that specify, and for the external isolation transformer with which it is intended to be used:		N/A
	- the configuration type		N/A
	- electrical ratings		N/A
	- environmental ratings		N/A
5.3.2.5	**PV modules for non-isolated inverters**		P
	Non-isolated inverters shall be provided with installation instructions that require PV modules that have an IEC 61730 Class A rating		P
	If the maximum AC mains operating voltage is higher than the PV array maximum system voltage then the instructions shall require PV modules that have a maximum system voltage rating based upon the AC mains voltage.		N/A
5.3.2.6	**Non-sinusoidal output waveform information**		N/A
	The instruction manual for a stand-alone inverter not complying with 4.7.5.2 shall include a warning that:		N/A
	- the waveform is not sinusoidal,		N/A
	- some loads may experience increased heating,		N/A
	- the user should consult the manufacturers of the intended load equipment before operating that load with the inverter		N/A
	The inverter manufacturer shall provide information regarding:		N/A
	- what types of loads may experience increased heating		N/A
	- recommendations for maximum operating times with such loads		N/A
	The inverter manufacturer shall specify for the waveforms as determined by the testing in 4.7.5.3.2 through 4.7.5.3.4.:		N/A
	- THD		N/A
	- slope		N/A
	- peak voltage		N/A
5.3.2.7	**Systems located in closed electrical operating areas**		N/A

IEC 62109-2			
Clause	Requirement + Test	Result - Remark	Verdict
	Where required by 4.8.3.6, an inverter not provided with full protection against shock hazard on the PV array shall be provided with installation instructions:		N/A
	- requiring that the inverter and the array must be installed in closed electrical operating areas		N/A
	- indicating which forms of shock hazard protection are and are not provided integral to the inverter (for example the RCD, isolation transformer complying with the 30 mA touch current limit, or residual current monitoring for sudden changes)		N/A
5.3.2.8	**Stand-alone inverter output circuit bonding**		N/A
	Where required by 7.3.10, the documentation for an inverter shall include the following:		N/A
	- if output circuit bonding is required but is not provided integral to the inverter, the required means shall be described in the installation instructions, including which conductor is to be bonded and the required current carrying capability or cross-section of the bonding means;		N/A
	- if the output circuit is intended to be floating, the documentation for the inverter shall indicate that the output is floating.		N/A
5.3.2.9	**Protection by application of RCD's**	Integrated RCM used inside	N/A
	Where the requirement for additional protection in 4.8.3.1 is met by requiring an RCD that is not provided integral to the inverter, as allowed by 4.8.3.4, the installation instructions shall state the need for the RCD,.		N/A
	and shall specify its rating, type, and required circuit location		N/A
5.3.2.10	**Remote indication of faults**		P
	The installation instructions shall include an explanation of how to properly make connections to (where applicable), and use, the electrical or electronic fault indication required by 13.9.	The instructions are specified "Warning List" of the product manual.	P
5.3.2.11	**External array insulation resistance measurement and response**	Integrated resistance measurement inside	N/A
	The installation instructions for an inverter for use with ungrounded arrays that does not incorporate all the aspects of the insulation resistance measurement and response requirements in 4.8.2.1, must include:		N/A
	- for isolated inverters: an explanation of what aspects of array insulation resistance measurement and response are not provided, and		N/A
	- an instruction to consult local regulations to determine if any additional functions are required or not;		N/A
	- for non-isolated inverters: an explanation of what external equipment must be provided in the system, and		N/A
	- what the setpoints and response implemented by that equipment must be, and:		N/A
	- how that equipment is to be interfaced with the rest of the system.		N/A
5.3.2.12	**Array functional grounding information**		N/A

IEC 62109-2			
Clause	Requirement + Test	Result - Remark	Verdict
	Where approach a) of 4.8.2.2 is used, the installation instructions for the inverter shall include all of the following:		N/A
	a) the value of the total resistance between the PV circuit and ground integral to the inverter ……		N/A
	b) the minimum array insulation resistance to ground that system designer or installer must meet when selecting the PV panel and system design, based on the minimum value that the design of the PV functional grounding in the inverter was based on ……;		N/A
	c) the minimum value of the total resistance R = VMAX PV/30 mA that the system must meet, with an explanation of how to calculate the total ……;		N/A
	d) a warning that there is a risk of shock hazard if the total minimum resistance requirement is not met.		N/A
5.3.2.13	**Stand-alone inverters for dedicated loads**		N/A
	Where the approach of 4.7.5.5 is used, the installation instructions for the inverter shall include a warning that the inverter is only to be used with the dedicated load for which it was evaluated, and		N/A
	shall specify the dedicated load.		N/A
5.3.2.14	**Identification of firmware version(s)**		P
	An inverter utilizing firmware for any protective functions shall provide means to identify the firmware version.		P
	This can be a marking, but the information can also be provided by a display panel, communications port or any other type of user interface…….	The firmware version is displayed on LCD display panel and disclosed by communication interface.	P
7	**PROTECTION AGAINST ELECTRIC SHOCK AND ENERGY HAZARDS**		P
7.3	**Protection against electric shock**		P
7.3.10	**Additional requirements for stand-alone inverters**		N/A
	One circuit conductor bonded to earth to create a grounded conductor and an earthed system.		N/A
	The means used to bond the grounded conductor to protective earth provided within the inverter or		N/A
	as part of the installation		N/A
	If not provided integral to the inverter, the required means shall be described in the installation instructions as per 5.3.2.8.		N/A
	The means used to bond the grounded conductor to protective earth shall comply with the requirements for protective bonding in Part 1,		N/A
	If the bond can only ever carry fault currents in stand-alone mode, the maximum current for the bond is determined by the inverter maximum output fault current.		N/A
	Output circuit bonding arrangements shall ensure that in any mode of operation, the system only has the grounded circuit conductor bonded to earth in one place at a time..		N/A

IEC 62109-2			
Clause	Requirement + Test	Result - Remark	Verdict
	Switching arrangements may be used, in which case the switching device used is to be subjected to the bond impedance test along with the rest of the bonding path		N/A
	Inverters intended to have a circuit conductor bonded to earth shall not impose any normal current on the bond except for leakage current.		N/A
	Outputs that are intentionally floating with no circuit conductor bonded to ground, must not have any voltages with respect to ground that are a shock hazard in accordance with Clause 7 of Parts 1 and 2.		N/A
	The documentation for the inverter shall indicate that the output is floating as per 5.3.2.8.		N/A
7.3.11	**Functionally grounded arrays**		N/A
	All PV conductors in a functionally grounded array shall be treated as being live parts with respect to protection against electric shock.		N/A
9	**PROTECTION AGAINST FIRE HAZARDS**		P
9.3	**Short-circuit and overcurrent protection**		P
9.3.4	**Inverter backfeed current onto the array**		P
	The backfeed current testing and documentation requirements in Part 1 apply, including but not limited to the following.		P
	Inverter backfeed current onto the PV array maximum value……..		P
	This inverter backfeed current value shall be provided in the installation instructions regardless of the value of the current, in accordance with Table 33.	No backfeed current that can flow out of the inverter PV input terminals.	P
13	**PHYSICAL REQUIREMENTS**		P
13.9	**Fault indication**		P
	Where this Part 2 requires the inverter to indicate a fault, both of the following shall be provided:		P
	a) a visible or audible indication, integral to the inverter, and detectable from outside the inverter, and		P
	b) an electrical or electronic indication that can be remotely accessed and used.		P
	The installation instructions shall include information regarding how to properly make connections (where applicable) and use the electrical or electronic means in b) above, in accordance with 5.3.2.10.		P

IEC 62109-2			
Clause	Requirement + Test	Result - Remark	Verdict

4.4.4	TABLE: Single fault condition to be applied						P
	Ambient temperature (°C) ..... :				25		—
	Power source for EUT: Manufacturer, model/type, output rating ..... :				--		—
4.4.4.15.1	Fault-tolerance of residual current monitoring						
Component No.	Fault	Supply voltage (V)	Test time	Fuse #	Fuse current (A)	Observation	
GFCI monitoring	Short before start	Input 850Vdc Output 230Vac	3min	--	--	PCE can't connect to grid, fault message:"Error: ID12". No hazard	
GFCI monitoring GFCI1 PIN3-PIN4	Short before start	Input 850Vdc Output 230Vac	3min	--	--	PCE connect to grid, fault message:"Error: ID12". No hazard.	
R201	Short before start	Input 850Vdc Output 230Vac	3min	--	--	LCD displays 'ID52'. Recoverable. No hazard, no damaged.	
R214	Short before start	Input 850Vdc Output 230Vac	3min	--	--	LCD displays 'ID52'. Recoverable. No hazard, no damaged.	
Q25 pin1-2	Short before start	Input 850Vdc Output 230Vac	3min	--	--	LCD displays 'ID52'. Recoverable. No hazard, no damaged.	
Check that the residual current monitoring operates properly						Yes	
Supplementary information: --							

4.4.4	TABLE: Single fault condition to be applied						P
	Ambient temperature (°C)				25		—
	Power source for EUT: Manufacturer, model/type, output rating				--		—
4.4.4.15.2	Fault-tolerance of automatic disconnecting means						
Component No.	Fault	Supply voltage (V)	Test time	Fuse #	Fuse current (A)	Observation	
RL1 Pin3-4	Short before start	Input 850Vdc Output 230Vac	3min	--	--	The EUT cannot start, LCD displays "ID55'. Recoverable. No hazard, no damaged.	

IEC 62109-2			
Clause	Requirement + Test	Result - Remark	Verdict

RL3 Pin3-4	Short before start	Input 850Vdc Output 230Vac	3min	--	--	The EUT cannot start, LCD displays "ID55'. Recoverable. No hazard, no damaged.
RL5 Pin3-4	Open before start	Input 850Vdc Output 230Vac	3min	--	--	The EUT cannot start, LCD displays "ID55'. Recoverable. No hazard, no damaged.
RL6	Short before start	Input 850Vdc Output 230Vac	3min	--	--	The EUT cannot start, LCD displays "ID55'. Recoverable. No hazard, no damaged.
RL4	Short before start	Input 850Vdc Output 230Vac	3min	--	--	The EUT cannot start, LCD displays "ID55'. Recoverable. No hazard, no damaged.
Check that the relays fulfil the basic insulation or simple separation based on the PV circuit working voltage.						There are two relays in serial used as automatic disconnection means. Contact gap is >1.5 mm for each relay.
Each active phase can be switched. (L and N)						Yes
Supplementary information: --						

4.4.4.17	Cooling system fainlure – Blanketing test		P
	Test voltage (Vdc) ..... :	600	—
	Test voltage (Vac) ..... :	230	—
	t_{amb1} (°C) ..... :	62	—
	t_{amb2} (°C) ..... :	62	—
maximum temperature T of part/at::		T (°C)	T_{max} (°C)
Ambient temp.		62	--
Heatsink beside the main inductor		78.8	90
Heatsink left		73.6	90
Supplementary information: --			

4.7.4	TABLE: Steady state Inverter AC output voltage and frequency		N/A
	Nominal DC input (V) Nominal output AC voltage (V) :		
AC output U (V)	Frequency (Hz)	Condition/status	Comments
--	--	--	--
Supplementary information: --			

IEC 62109-2			
Clause	Requirement + Test	Result - Remark	Verdict

4.8.2	TABLE: Array insulation resistance detection for inverters for ungrounded and functionally grounded arrays	P
4.8.2.1	Array insulation resistance detection for inverters for ungrounded arrays	P

DC Voltage below minimum operating voltage (V)	DC Voltage for inverter begin operation (V)	Resistance between ground and PV input terminal (Ω)	Required Insulation resistance R = ($V_{MAX\ PV}$ / 30mA) (Ω)	Result
DC+				
160V	180V	30.0kohm	33.33kohm	The PV inverter cannot start-up. Error message: “ID56”
160V	180V	30.0kohm	33.33kohm	The PV inverter cannot start-up. Error message: “ID56”
160V	180V	30.0kohm	33.33kohm	The PV inverter cannot start-up. Error message: “ID56”
160V	180V	30.0kohm	33.33kohm	The PV inverter cannot start-up. Error message: “ID56”
160V	180V	30.0kohm	33.33kohm	The PV inverter cannot start-up. Error message: “ID56”
DC-				
160V	180V	30.0kohm	33.33kohm	The PV inverter cannot start-up. Error message: “ID56”
160V	180V	30.0kohm	33.33kohm	The PV inverter cannot start-up. Error message: “ID56”
160V	180V	30.0kohm	33.33kohm	The PV inverter cannot start-up. Error message: “ID56”
160V	180V	30.0kohm	33.33kohm	The PV inverter cannot start-up. Error message: “ID56”
160V	180V	30.0kohm	33.33kohm	The PV inverter cannot start-up. Error message: “ID56”

Note:
For isolated inverters, shall indicate a fault in accordance with 13.9 (operation is allowed); the fault indication shall be maintained until the array insulation resistance has recovered to a value higher than the limit above
For non-isolated inverters, or inverters with isolation not complying with the leakage current limits in the minimum inverter isolation requirements in Table 30, shall indicate a fault in accordance with 13.9, and shall not connect to the mains; the inverter may continue to make the measurement, may stop indicating a fault and may connect to the mains if the array insulation resistance has recovered to a value higher than the limit above.
It is not required to test all PV input terminals if analysis of the design indicates that one or more terminals can be expected to have the same result, for example where multiple PV string inputs are in parallel.

Supplementary information: --

IEC 62109-2			
Clause	Requirement + Test	Result - Remark	Verdict

4.8.3.2	TABLE: 30mA touch current type test for isolated inverters	N/A
Condition	Current (mA)	Limit (30mA)
DC+ to PE		
DC- to PE		
Supplementary information: The touch current measurement circuit of IEC 60990, Figure 4 is connected from each terminal of the array to ground, one at a time.		

4.8.3.3	TABLE: Fire hazard residual current type test for isolated inverters	N/A
Condition	Current (mA)	Limit (300mA or 10mA per kVA)
DC+ to PE		
DC- to PE		
Supplementary information:		

4.8.3.5	TABLE: Protection by residual current monitoring	P
Test conditions:	Output power (kVA): 12 Input voltage (V_{DC}): 850 Frequency (Hz): 50 Output AC Voltage (V_{AC}): 230	

4.8.3.5.2	Test for detection of excessive continuous residual current	P

Fault Current (mA)		Disconnection time (ms)	
Measured Fault Current	Limit 300mA for output power ≤ 30 kVA 10mA per kVA for output power > 30 kVA	Measured Disconnection time	Limit
+ PV to N:			
221 mA	300	264.0	300
220 mA	300	250.0	300
219 mA	300	250.0	300
221 mA	300	252.0	300
220 mA	300	230.0	300
- PV to N:			
228 mA	300	220.0	300
230 mA	300	222.0	300
229 mA	300	228.0	300
231 mA	300	246.0	300
228 mA	300	256.0	300
Note:			

IEC 62109-2			
Clause	Requirement + Test	Result - Remark	Verdict

– maximum 300mA for inverters with continuous output power rating ≤30 kVA;
– maximum 10mA per kVA of rated continuous output power for inverters with continuous output power rating > 30 kVA.
This test shall be repeated 5 times, and for all 5 tests the time to disconnect shall not exceed 0,3s.
The test is repeated for each PV input terminal. It is not required to test all PV input terminals if analysis of the design indicates that one or more terminals can be expected to have the same result, for example where multiple PV string inputs are in parallel.

Supplementary information:

4.8.3.5.3	TABLE: Test for detection of sudden changes in residual current	P
	+PV to N	
Limit (mA)	U_N Disconnection time (ms)	Limit (ms)
30	221.0	300
30	228.0	300
30	222.5	300
30	231.0	300
30	227.1	300
60	132.0	150
60	132.0	150
60	130.4	150
60	133.4	150
60	133.2	150
150	35.2	40
150	34.6	40
150	36.2	40
150	35.6	40
150	34.2	40
	-PV to N	
Limit (mA)	U_N Disconnection time (ms)	Limit (ms)
30	220.8	300
30	216.2	300
30	224.8	300
30	226.4	300
30	221.4	300
60	132.6	150
60	131.2	150
60	131.4	150
60	134.0	150
60	132.6	150

IEC 62109-2			
Clause	Requirement + Test	Result - Remark	Verdict
150	34.4		40
150	33.4		40
150	34.2		40
150	35.4		40
150	34.8		40

Note:
The capacitive current is raised until disconnection.
Test condition: I_c + 30/60/150mA <= I_{cmax}. R_1 is set that 30/60/150mA Flow and switch S is closed.

Supplementary information:

(End of Report)