中国认可
国际互认
检测
TESTING
CNAS L6791

Test Report issued under the responsibility of:

TEST REPORT
IEC 60255-27
Measuring relays and protection equipment – Part 27: Product safety requirements

Report Number.....:	BL-DG2120038-B02
Date of issue.....:	Mar. 02, 2021
Total number of pages	41
Name of Testing Laboratory preparing the Report .....:	Shenzhen BALUN Technology Co., Ltd
Address of Testing Laboratory preparing the Report .....:	Room 104, 204, 205, Building 1, No. 6, Industrial South Road, Songshan Lake District, Dongguan, Guangdong, China
Applicant's name .....:	Hitachi Hi-Rel Power Electronics Pvt. Ltd.
Address.....:	SM 3 & 4, Sanand – II GIDC, Industrial Estate, Boll Village, Sanand – 382 110, Gujarat, India.
Test specification:	
Standard .....:	IEC 60255-27:2013
Test procedure .....:	Commissioned test
Non-standard test method .....:	N/A
Test item description.....:	Solar Grid-tied Inverter
Trade Mark.....:	HITACHI
Manufacturer .....:	Hitachi Hi-Rel Power Electronics Pvt. Ltd.
Model/Type reference .....:	Hiverter-Si-80K, Hiverter Si-100K, Hiverter Si-110K, Hiverter Si-100K-HV, Hiverter Si-125K-HV, Hiverter Si-136K-HV,
Ratings .....:	See copy of marking label and model list.
Testing Laboratory .....:	Shenzhen BALUN Technology Co., Ltd
Testing location/ address .....:	Room 104, 204, 205, Building 1, No. 6, Industrial South Road, Songshan Lake District, Dongguan, Guangdong, China
Tested by (name, function, signature).....:	Colin Chen /Engineer
Approved by (name, function, signature).....:	Simon Qi /Chief Engineer

General disclaimer:

The test results presented in this report relate only to the object tested.

This report shall not be reproduced, except in full, without the written approval of the Issuing Testing Laboratory. The authenticity of this Test Report and its contents can be verified by contacting the Testing Laboratory, responsible for this Test Report.

Note:

The only difference between the EUT (test samples in this report) and testing sample of report BL-DG2071002-B01, which was issued by Shenzhen BALUN Technology Co., Ltd. on Oct. 09, 2020 as below:

1. The new applicant, Manufacturer, trademark, label, Appearance photo and models.

The above differences will not influence the testing. So the test result is referred from report BL-DG2071002-B01, which was issued by Shenzhen BALUN Technology Co., Ltd. on Oct. 09, 2020.

List of Attachments (including a total number of pages in each attachment):

Tests against:

Total test reports contain 1 part and 2 attachments listed in below table:

Item	Description	pages
Part 1	Test report of IEC 60255-27:2013	41
ATTACHMENT 1	Photo documentation	12

Summary of testing:

Tests performed (name of test and test clause):

5.2 Fault condition tests

6.1.1 Stability:

7.3 Heating Test

10.6.1.1 Dry-heat test – operational.

10.6.1.2 Cold test – operational.

10.6.1.3 Dry heat test at maximum storage temperature.

10.6.1.4 Cold test at minimum storage temperature.

10.6.1.5 Damp-heat test.

10.6.1.6 Cyclic temperature with humidity test.

10.6.2.1 Vibration

10.6.2.2 Shock

10.6.2.3 Bump

10.6.2.4 Seismic

10.6.3 Clearances and creepage distances

10.6.4 Safety-related electrical tests

Remark:

- The max.operating temperature is 60ºC specified by manufacturer, the temperature rise tests were conducted at the max.rated ambient temperature of 45°C or 60ºC (derating) in the chamber.
- Other testing conditions considered in this test report, see General Product Information on the following pages.

Testing location:

All tests are performed at address 1 listed on page 1.

Summary of compliance with National Differences (List of countries addressed): None.

☒ **The product fulfils the requirements of IEC 60255-27:2013.**

Copy of marking plate:

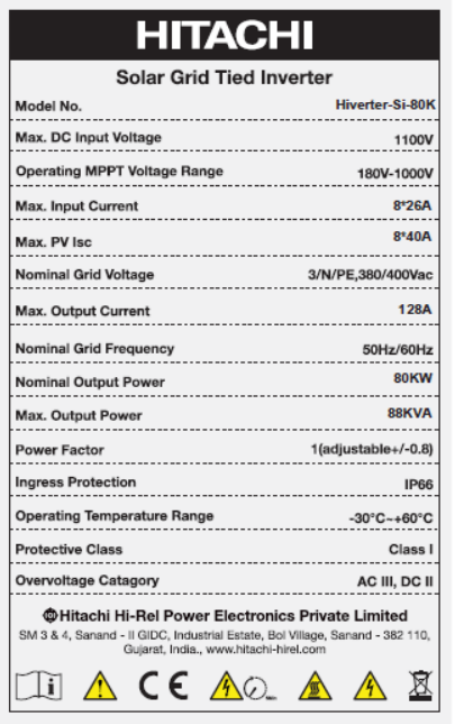

HITACHI

Solar Grid Tied Inverter

Model No.	Hiverter-Si-80K
Max. DC Input Voltage	1100V
Operating MPPT Voltage Range	180V-1000V
Max. Input Current	8*26A
Max. PV Isc	8*40A
Nominal Grid Voltage	3/N/PE,380/400Vac
Max. Output Current	128A
Nominal Grid Frequency	50Hz/60Hz
Nominal Output Power	80KW
Max. Output Power	88KVA
Power Factor	1(adjustable+/-0.8)
Ingress Protection	IP66
Operating Temperature Range	-30°C~+60°C
Protective Class	Class I
Overvoltage Catagory	AC III, DC II

Hitachi Hi-Rel Power Electronics Private Limited

SM 3 & 4, Sanand - II GIDC, Industrial Estate, Bol Village, Sanand - 382 110, Gujarat, India., www.hitachi-hirel.com

Hiverter-Si-80K

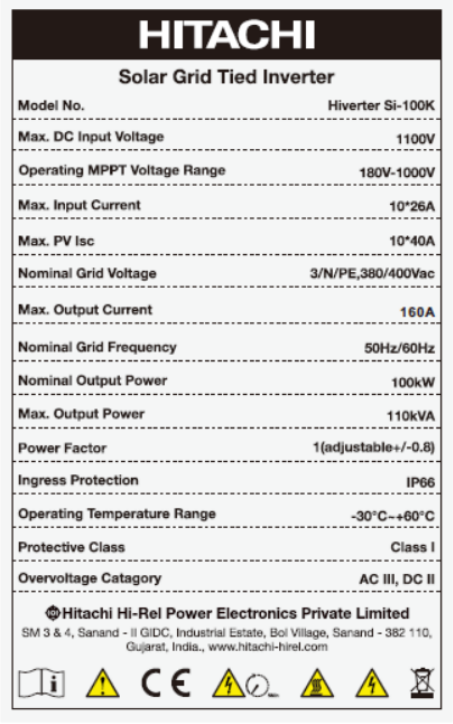

HITACHI

Solar Grid Tied Inverter

Model No.	Hiverter Si-100K
Max. DC Input Voltage	1100V
Operating MPPT Voltage Range	180V-1000V
Max. Input Current	10*26A
Max. PV Isc	10*40A
Nominal Grid Voltage	3/N/PE,380/400Vac
Max. Output Current	160A
Nominal Grid Frequency	50Hz/60Hz
Nominal Output Power	100kW
Max. Output Power	110kVA
Power Factor	1(adjustable+/-0.8)
Ingress Protection	IP66
Operating Temperature Range	-30°C~+60°C
Protective Class	Class I
Overvoltage Catagory	AC III, DC II

Hitachi Hi-Rel Power Electronics Private Limited

SM 3 & 4, Sanand - II GIDC, Industrial Estate, Bol Village, Sanand - 382 110, Gujarat, India., www.hitachi-hirel.com

Hiverter Si-100K

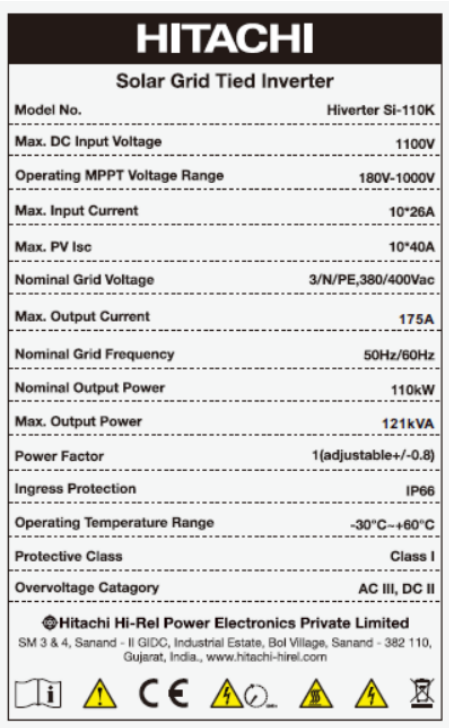

HITACHI

Solar Grid Tied Inverter

Model No.	Hiverter Si-110K
Max. DC Input Voltage	1100V
Operating MPPT Voltage Range	180V-1000V
Max. Input Current	10*26A
Max. PV Isc	10*40A
Nominal Grid Voltage	3/N/PE,380/400Vac
Max. Output Current	175A
Nominal Grid Frequency	50Hz/60Hz
Nominal Output Power	110kW
Max. Output Power	121kVA
Power Factor	1(adjustable+/-0.8)
Ingress Protection	IP66
Operating Temperature Range	-30°C~+60°C
Protective Class	Class I
Overvoltage Catagory	AC III, DC II

Hitachi Hi-Rel Power Electronics Private Limited

SM 3 & 4, Sanand - II GIDC, Industrial Estate, Bol Village, Sanand - 382 110, Gujarat, India., www.hitachi-hirel.com

Hiverter Si-110K

HITACHI

Solar Grid Tied Inverter

Model No.	Hiverter Si-100K-HV
Max. DC Input Voltage	1100V
Operating MPPT Voltage Range	180V-1000V
Max. Input Current	10*26A
Max. PV Isc	10*40A
Nominal Grid Voltage	3/PE,288/500Vac
Max. Output Current	128A
Nominal Grid Frequency	50Hz/60Hz
Nominal Output Power	100kW
Max. Output Power	110kVA
Power Factor	1(adjustable+/-0.8)
Ingress Protection	IP66
Operating Temperature Range	-30°C~+60°C
Protective Class	Class I
Overvoltage Catagory	AC III, DC II

Hitachi Hi-Rel Power Electronics Private Limited

SM 3 & 4, Sanand - II GIDC, Industrial Estate, Bol Village, Sanand - 382 110, Gujarat, India., www.hitachi-hirel.com

Hiverter Si-100K-HV

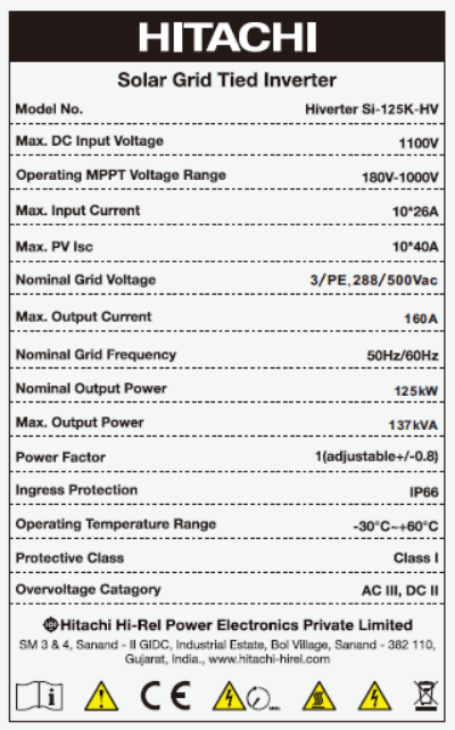

HITACHI

Solar Grid Tied Inverter

Model No.	Hiverter Si-125K-HV
Max. DC Input Voltage	1100V
Operating MPPT Voltage Range	180V-1000V
Max. Input Current	10*26A
Max. PV Isc	10*40A
Nominal Grid Voltage	3/PE,288/500Vac
Max. Output Current	160A
Nominal Grid Frequency	50Hz/60Hz
Nominal Output Power	125kW
Max. Output Power	137kVA
Power Factor	1(adjustable+/-0.8)
Ingress Protection	IP66
Operating Temperature Range	-30°C~+60°C
Protective Class	Class I
Overvoltage Catagory	AC III, DC II

Hitachi Hi-Rel Power Electronics Private Limited

SM 3 & 4, Sanand - II GIDC, Industrial Estate, Bol Village, Sanand - 382 110, Gujarat, India., www.hitachi-hirel.com

Hiverter Si-125K-HV

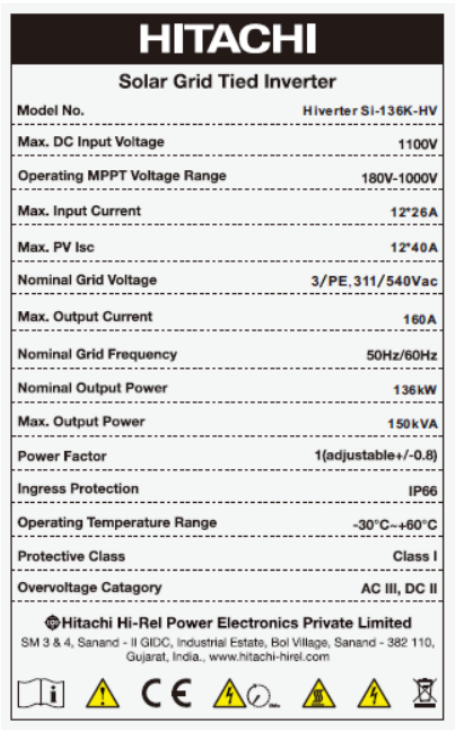

HITACHI

Solar Grid Tied Inverter

Model No.	Hiverter Si-136K-HV
Max. DC Input Voltage	1100V
Operating MPPT Voltage Range	180V-1000V
Max. Input Current	12*26A
Max. PV Isc	12*40A
Nominal Grid Voltage	3/PE,311/540Vac
Max. Output Current	160A
Nominal Grid Frequency	50Hz/60Hz
Nominal Output Power	136kW
Max. Output Power	150kVA
Power Factor	1(adjustable+/-0.8)
Ingress Protection	IP66
Operating Temperature Range	-30°C~+60°C
Protective Class	Class I
Overvoltage Catagory	AC III, DC II

Hitachi Hi-Rel Power Electronics Private Limited

SM 3 & 4, Sanand - II GIDC, Industrial Estate, Bol Village, Sanand - 382 110, Gujarat, India., www.hitachi-hirel.com

Hiverter Si-136K-HV

Note:

1. The above markings are the minimum requirements required by the safety standard. For the final production samples, the additional markings which do not give rise to misunderstanding may be added.
2. Label is attached on the side surface of enclosure and visible after installation

Test item particulars .....:	
Equipment mobility .....:	☐ movable ☐ hand-held ☐ stationary ☒ fixed ☐ transportable ☐ for building-in
Connection to the mains .....:	☐ pluggable equipment ☐ direct plug-in ☒ permanent connection ☐ for building-in
Environmental category .....:	☒ outdoor ☐ indoor unconditional ☐ indoor conditional
Over voltage category Mains .....:	☐ OVC I ☐ OVC II ☒ OVC III ☐ OVC IV
Over voltage category PV.....:	☐ OVC I ☒ OVC II ☐ OVC III ☐ OVC IV
Mains supply tolerance (%).....:	According to the specified supply range.
Tested for power systems.....:	TN
IT testing, phase-phase voltage (V) .....:	N/A
Class of equipment .....:	☒ Class I ☐ Class II ☐ Class III ☐ Not classified
Mass of equipment (kg) .....:	See model list.
Pollution degree.....:	PD3(Inside PD2)
IP protection class.....:	IP66
.....:	
Possible test case verdicts:	
- test case does not apply to the test object..... :	N/A
- test object does meet the requirement ..... :	P (Pass)
- test object was not evaluated for the requirement:	N/E
- test object does not meet the requirement..... :	F (Fail)
Testing ..... :	
Date of receipt of test item ..... :	Aug. 14, 2020
Date (s) of performance of tests..... :	Aug. 14, 2020 to Sept. 27, 2020

General remarks:	
"(See Enclosure #)" refers to additional information appended to the report. "(See appended table)" refers to a table appended to the report. The tests results presented in this report relate only to the object tested. This report shall not be reproduced except in full without the written approval of the testing laboratory. List of test equipment must be kept on file and available for review. Additional test data and/or information provided in the attachments to this report. **Throughout this report a ☐ comma / ☒ point is used as the decimal separator.** Determination of the test results includes consideration of measurement uncertainty from the test equipment and methods.	
Manufacturer's Declaration per sub-clause 4.2.5 of IECEE 02:	
The application for obtaining a CB Test Certificate includes more than one factory location and a declaration from the Manufacturer stating that the sample(s) submitted for evaluation is (are) representative of the products from each factory has been provided .....:	☐ **Yes** ☒ **Not applicable**
When differences exist; they shall be identified in the General product information section.	
Name and address of factory (ies)..... :	Dongguan SOFAR SOLAR Co., Ltd. 1F - 6F, Building E, No. 1 JinQi Road, Bihu Industrial Park, Wulian Village, Fenggang Town, Dongguan City.

General product information:

Brief description:

The PCE under test (EUT) is Solar Gird-tied Inverter. During inverter, which convert the variable DC power generated from the photovoltaic (PV) arrays to the stable utility AC power which can be fed into the commercial electrical grid.

The models of Hiverter-Si-80K 1, Hiverter Si-100K, Hiverter Si-110K, Hiverter Si-100K-HV, Hiverter Si-125K-HV and Hiverter Si-136K-HV are the same in topology diagram and hardware, only the software control is different. The differences between each other are as follows:

Model Number	**Hiverter-Si-80K**	**Hiverter Si-100K**	**Hiverter Si-110K**
Input (DC)			
Max. input voltage	1100Vdc		
Rated input voltage	625Vdc		
MPPT operating voltage range	180V~1000V		
Full load MPPT Voltage Range	500V-850V		
Number of MPP trackers	8	10	10
Number for DC inputs	2 for each MPPT		
Max. input current per MPPT	26A		
Max. input short circuit current per MPPT	40A		
Output(AC)			
Rated power	80kW	100kW	110kW
Max. AC power	88kVA	110kVA	121kVA
Max. output current	128A	160A	175A
Nominal grid voltage	3/N/PE,230V/400Vac，220V/380Vac		
Grid voltage range	310Vac-480Vac		
Nominal frequency	50 / 60Hz		
General Data			
Ambient temperature range	-30℃~+60℃		
Degree of protection	IP66		
Weight	85kg	90 kg	90 kg
Dimension	995.5*693.5*368mm		

Model Number	**Hiverter Si-100K-HV**	**Hiverter Si-125K-HV**	**Hiverter Si-136K-HV**
Input (DC)			
Max. input voltage	1100Vdc		
Rated input voltage	725Vdc		785Vdc
MPPT operating voltage range	180V~1000V		
Full load MPPT Voltage Range	550V-850V		
Number of MPP trackers	10	10	12
Number for DC inputs	2 for each MPPT		

Max. input current per MPPT	26A		
Max. input short circuit current per MPPT	40A		
Output(AC)			
Rated power	100kW	125kW	136kW
Max. AC power	110kVA	137kVA	150kVA
Max. output current	128A	160A	160A
Nominal grid voltage	3/PE, 500Vac		3/PE, 540Vac
Grid voltage range	400Vac-575Vac		432Vac~621Vac
Nominal frequency	50 / 60Hz		
General Data			
Ambient temperature range	-30℃~+60℃		
Degree of protection	IP66		
Weight	85kg	90 kg	92 kg
Dimension	995.5*693.5*368mm		

Unless otherwise specified, all the tests were conducted on the basic model of Hiverter Si-136K-HV

The input and output are protected by varistors to Earth. The unit is providing EMC filtering at the output toward mains. The unit does not provide galvanic separation from input to output (transformerless). The output is switched off redundant by the high-power switching bridge and two relays. This assures that the opening of the output circuit can operate in case of single fault.

Block Diagram:

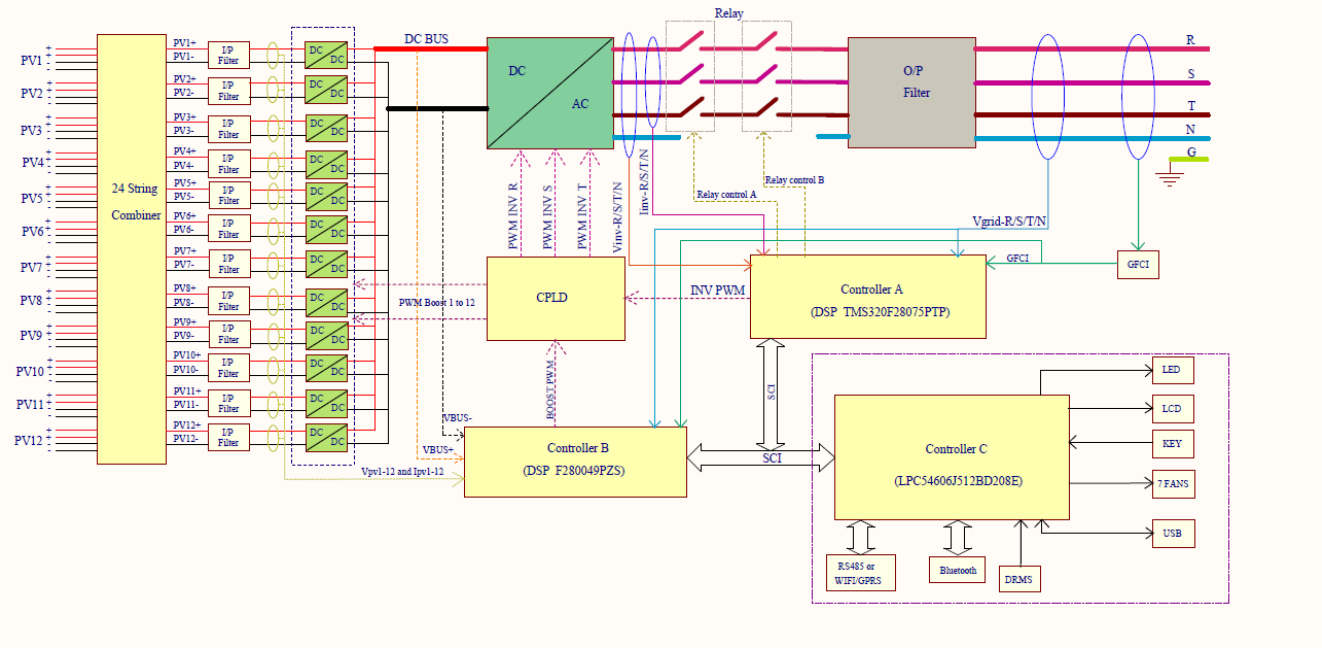

Throughout the test report following abbreviations may be used:

- input	i/p	- Test repeated, similar result(3 times)	TRSR
- output	o/p	- No indication of dielectric breakdown	NB
- short-circuited	s-c	- Cheesecloth remained intact	NC
- overloaded	o-l	- Tissue paper remained intact	NT
- open-circuited	o-c	- No hazards	NH
- normal conditions	N.C.	- The PCE can recover to operate automaticly after removing the abnormal condition	RO
- single fault conditions	SFC	- functional insulation	FI
- between parts of opposite polarity	BOP	- basic insulation	BI
- internal protection operated	IPO	- supplementary insulation	SI
- Component damage (list damaged component)	CD	- double insulation	DI
- No component damaged	NCD	- reinforced insulation	RI
- Power Conversion Equipment Indicate used abbreviations (if any)	PCE	- Equipment Under Test	EUT

IEC 60255-27			
Clause	Requirement – Test	Result – Remark	Verdict
4	**General safety requirements**		-
4.1	General		P
4.2	Earthing requirements		P
5	**Protection against electric shock**		
5.1	General		-
5.1.1	Introductory remark ..... :		P
5.1.2	Protection from contact with hazardous live parts		-
5.1.2.1	General		P
5.1.2.2	Insulation		P
5.1.2.3	Equipment case and barriers	IP66 enclosure and no opening in the case.	-
	Hazardous live parts..... :	Hazardous live parts were separated from the accessible part.	P
	Top surfaces of barriers accessible in normal use. :	No opening of EUT and the cover only can be removed with tool by trained personnel.	P
	Protection in service access areas..... :		P
	- with rigid test finger and a force of 10 N ..... :		N/A
	- with jointed test finger ..... :		N/A
5.1.2.4	Hazardous live terminations using stranded wire		P
5.1.3	Discharge of capacitors		-
	Compliance checked by calculation ..... :		P
	Measured voltage (V); time-constant (s) ..... :		P
	Residual charge (μC) ..... :		P
5.1.4	Protective impedance	No protective impedance used.	-
	Requirements of 5.1.5.3.2 in normal and to level of 5.2.4.1.2 in single fault condition		N/A
	The protective impedance consists of one or more of the following:		N/A
	- appropriate high-integrity single component ..... :		N/A
	- combination of components..... :		N/A
	- combination of basic insulation and a current- or voltage-limiting device ..... :		N/A
	Voltage test for double/reinforced insulation ..... :		N/A

IEC 60255-27			
Clause	Requirement – Test	Result – Remark	Verdict
	Components and associated basic insulation checked after a single-fault condition assessment or test according to 10.6.5.5. ..... :		N/A
	Clearance, creepage distance between terminations of the impedance meet requirements of double or reinforced insulation of Annex C of this standard and 6.7 of IEC 61010-1:2010 ..... :		N/A
5.1.5	Accessible parts		-
5.1.5.1	General	All accessible metal parts were earthed and separated from live parts by basic insulation. All external accessible circuit were separated from live parts by reinforce insulation.	P
5.1.5.2	Determination of accessible parts		-
5.1.5.2.1	General		P
	Normal operational use, with or without the aid of a too lwhich will increase the accessibility..... :	See 5.1.5.2.2 to 5.1.5.2.4 or test by inspection	P
5.1.5.2.2	General examination	No opening of EUT and the cover only can be removed with tool by trained personnel.	-
	Test with jointed test finger.....:		P
	Test with rigid test finger (force of 10 N) .....:		P
5.1.5.2.3	Openings above parts, enclosed by the case, which are hazardous live	No opening of EUT and the cover only can be removed with tool by trained personnel.	-
	Test with test pin (100mm, Ø4mm) ..... :		N/A
5.1.5.2.4	Openings for pre-set controls	No opening of EUT and the cover only can be removed with tool by trained personnel.	-
	Test with test pin (100mm, Ø3mm) ..... :		N/A
5.1.5.2.5	ELV rated or live parts accessible when cover removed		-
	Removing the cover without tools ..... :	No opening of EUT and the cover only can be removed with tool by trained personnel.	N/A
	- Symbol 14 ..... :		N/A
	- Symbol 12 ..... :		N/A
5.1.5.2.6	Wiring terminals		-
	IP1X according to 5.1 of IEC 60529 ..... :		P
	- Symbol 12 ..... :		P
5.1.1.3	Permissible limits for accessible parts		-

IEC 60255-27			
Clause	Requirement – Test	Result – Remark	Verdict
5.1.5.3.1	General ..... :		P
	Values of 5.1.5.3.2 in normal operational condition and nor those of 5.2.4.1.2 in single-fault condition.		P
5.1.5.3.2	Values under normal conditions		-
	a) Voltage limits less than 33 V r.m.s. or 70 V d.c. :		P
	for wet locations voltage limits less than 25 V r.m.s. or 37.5V d.c. ..... :	Communication port was accessible conductive part that voltage less than 25 V r.m.s. or 37.5 V d.c.	P
	Voltages are not hazardous live the levels of:	Communication port.	P
	b) Current less than 0,5 mA r.m.s. for sinusoidal, 0,7 mA peak non-sinusoidal or mixed frequencies or 2 mA d.c. when measured with measuring circuit A.1 or A.2 if less than 100 Hz		N/A
	for WET LOCATIONS measuring circuit A.4 used		N/A
	70 mA r.m.s. when measured with circuit A.3 for higher frequencies :		N/A
	c) Levels of capacitive charge or energy less:		N/A
	1) 45 µC for voltages up to 15 kV peak or d.c. or line A of Figure 3 of IEC 61010-1:2010		N/A
	2) 350 mJ stored energy for voltages above 15 kV peak or d.c.		N/A
5.1.6	Bonding to the protective conductor		-
5.1.6.1	Insulation between live parts and accessible conductive parts		P
	Accessible conductive parts ..... :		P
	Unearthed accessible conductive parts:		P
	- separated from by double insulation or reinforced insulation, or..... :		P
	- Equipment of class I protection..... :		P
5.1.6.2	Protective bonding		P
	Accessible conductive parts bonded, or		P
	- EVL circuit protected in case of direct contact of 5.1.5..... :		P
	- magnetic cores are used..... :		P
	- parts of small dimensions separated from hazardous live parts by at least basic insulation ..... :		P
5.1.6.3	Bonding of parts connected to the protective conductor..... :		P

IEC 60255-27			
Clause	Requirement – Test	Result – Remark	Verdict
5.1.6.4	Protection against corrosion ..... :		P
5.1.6.5	Interruption of protective bonding ..... :	No such protective bonding.	N/A
5.1.7	Protective conductor connection ..... :		N/A
	- means of connection ..... :		N/A
	- suitable for use ..... :		N/A
	- not be used as a part of the mechanical assembly ..... :		N/A
5.1.8	High leakage current ..... :	Measured continuous leakage current was 2.93 mA, and the EUT was permanently connected equipment.	N/A
5.1.9	Solid insulation		-
5.1.9.1	General ..... :		P
5.1.9.2	Requirements ..... :	(see appended table 10.6.4.2/ 10.6.4.3)	P
5.1.10	Clearances and creepage distances		
5.1.10.1	General ..... :		P
5.1.10.2	Clearances ..... :		P
5.1.10.2.1	General ..... :		P
5.1.10.2.2	Clearances for primary circuits ..... :	(see appended table 10.6.3)	P
5.1.10.2.3	Clearances for non-primary circuits..... :	(see appended table 10.6.3)	P
5.1.10.2.4	Creepage distances..... :	(see appended table 10.6.3)	P
5.1.11	Functional earthing ..... :		P
	Requirements:		P
	- Connection to protective conductor terminal permitted ..... :		P
	- separated by a functional insulation..... :		P
	- separated from parts at hazardous voltage by ..... :		P
	1) double insulation or reinforced insulation : or		P
	2) a protectively earthed screen or another protectively earthed conductive part, separated from parts at hazardous voltages by at least basic insulation:		P
5.2	Single-fault conditions		-
5.2.1	Testing in single-fault condition	(see appended table 5.2)	P
	not risk of electric shock or fire after a single-fault test ..... :		P

IEC 60255-27			
Clause	Requirement – Test	Result – Remark	Verdict
5.2.2	Application of single-fault condition		P
5.2.2.1	General ..... :		P
5.2.2.2	Protective impedance ..... :		N/A
5.2.2.3	Transformers ..... :		P
5.2.2.4	Outputs ..... :		P
5.2.2.5	Insulation between circuits and parts ..... :		P
5.2.2.6	Primary circuits and hazardous voltage non-primary circuits ..... :		P
5.2.2.7	Overloads ..... :		P
5.2.2.8	Intermittently rated resistors ..... :	No such resistors used.	N/A
5.2.2.9	DC inputs ..... :		P
5.2.3	Duration of tests ..... :		P
5.2.4	Compliance		-
5.2.4.1	Compliance with requirements for electric shock protection		-
5.2.4.1.1	General ..... :		P
5.2.4.1.2	Values in single-fault condition	(see appended table 5.2.4.1.2)	P
	a) Voltage limits less than 55 V r.m.s. or 140 Vd.c. ..... :		P
	- For temporary voltages, limits less than 55 V r.m.s. and 78 V peak or 140 V d.c.		P
	- for wet locations voltage limits less than 33V r.m.s. or 70d.c. ..... :	Communication port was accessible conductive part that voltage less than 33 V r.m.s. or 70 V d.c.	P
	b) Current less than 3,5 mA r.m.s. for sinusoidal, 5 mA peak non-sinusoidal or mixed frequencies or 15 mA d.c. when measured with measuring circuit A.1 or A.2 if less than 100 Hz or 500mA r.m.s (Figure with *R*B = 75 Ω Relates to possible burns in the frequency range 30 kHz to 500 kHz)		N/A
	- for wet locations measuring circuit A.4 used (with RS = 375 Ω (instead of 1 500 Ω) ..... :		N/A
	- Current less than 3,5 mA r.m.s. for sinusoidal, 5 mA peak non-sinusoidal or mixed frequencies or 15 mA d.c ..... :		N/A
	c) capacitance level is that defined in Figure 3. curve B in IEC 61010-1:2010 ..... :		N/A

IEC 60255-27			
Clause	Requirement – Test	Result – Remark	Verdict
5.2.4.2	Compliance with requirements for temperature protection ..... :		P
5.2.4.3	Compliance with requirements for protection against the spread of fire ..... :		P
5.2.4.4	Compliance with requirements for hazardous gases and chemicals..... :		P
5.2.4.5	Compliance with requirements for mechanical protection		P
6	**Mechanical aspects**		**-**
6.1	Protection against mechanical hazards		-
6.1.1	Stability ..... :		P
6.1.2	Moving parts ..... :		N/A
6.1.3	Edges and corners ..... :		P
6.2	Mechanical requirements		P
	Mechanical tests requirements of 10.6.2.1 to 10.6.2.4. ..... :		P
	Higher severity levels ..... :		N/A
6.3	Mechanical security of terminations	(see Annex E)	P
7	**Flammability and resistance to fire**		-
7.1	General		P
	reducing the risk of fire by one of the following means:		-
	- Eliminating or reducing the sources of ignition within the equipment..... :		P
	- Reducing the amount of combustible (or flammable) materials within the equipment ..... :		P
	- Containment of a fire within the equipment ..... :		P
7.2	Rationale		P
	Risk of fire in normal and single fault condition..... :		P
	In order for a risk of fire within the equipment to exist, all three of the following basic elements shall exist:		P
	- The equipment circuits shall have sufficient power or energy to be an ignition source.. :		P
	- There shall be oxygen present (air is about 21 % oxygen) ..... :		P

IEC 60255-27			
Clause	Requirement – Test	Result – Remark	Verdict
	- There shall be combustible materials present to support the combustion process ..... :		P
	Conformity is checked by minimum one or a combination of the following (see Figure 1):		P
	- Equipment temperature limits of 7.3.1 ..... :		P
	- Single Fault test of 7.11 and 10.6.5.5 ..... :		P
	- Minimization of fire risk and reducing sources of ignition of 7.4 and 7.4.2 ..... :		P
	- Containment of a fire within equipment of 7.10 ..... :		P
7.3	General hazards from overheating and fire		-
7.3.1	Equipment temperature limits:		P
	- In normal conditions..... :	(See appended table 7.3)	P
	- In single-fault condition (limits of clause 7.11) ..... :	(See appended table 5.2)	P
	Symbol 13 of Table 10..... :		P
	Symbol 14 of Table 10..... :		P
7.3.2	Hazardous gases and chemicals	No gases and chemicals used.	-
	Manufacturer's documentation ..... :		N/A
7.4	Minimization of fire risk		-
7.4.1	General:		P
	Critical components of primary circuits and circuits exceeding ELV voltage limits. Compliance with Annex D ..... :		P
7.4.2	Eliminating or reducing the sources of ignition within the equipment		P
	a) Either 1) or 2)		P
	1) Limited-energy circuit as specified in 7.12 ..... :		P
	2) Insulation between parts at different potentials, compliance with clause 7.11 ..... :		P
	b) circuits designed to produce heat in compliance with clause 5.2..... :		N/A
	Circuits not classified as limited-energy circuits. Method i) or ii) below shall be used.		P
	i) Testing in the single-fault conditions in compliance with clause 5.2 ..... :		P
	ii) Verifying as in 7.11 that if a fire occurs it will be contained within the equipment..... :		P

IEC 60255-27			
Clause	Requirement – Test	Result – Remark	Verdict
7.5	Cabling and fusing		P
	Manufacturer's recommendations:		P
	- Connection cables: minimum cross-section and voltage rating ..... :		P
	- Protection devices ..... :		P
7.6	Flammability of materials and components		-
7.6.1	General ..... :		P
	Conformity is checked by inspection ..... :	(See appended table 7.6)	P
	Tests in compliance with IEC 60695-11-10..... :	(See appended table 7.6)	P
7.6.2	Materials for components and other parts inside fire enclosures ..... :	(See appended table 7.6)	P
7.6.3	Materials for fire enclosures ..... :	(See appended table 7.6)	P
7.6.4	Materials for components and other parts outside fire enclosures ..... :	(See appended table 7.6)	P
7.7	Fire ignition sources ..... :		P
7.8	Conditions for a fire enclosure		-
7.8.1	General ..... :		P
7.8.2	Parts requiring a fire enclosure ..... :		P
7.8.3	Parts not requiring a fire enclosure ..... :		P
7.9	Requirements for primary circuits and circuits exceeding ELV limits ..... :		P
7.10	Fire enclosures and flame barriers		-
	Enclosure meets following requirements:	No opening in the metal enclosure.	P
	Bottom:		P
	- no openings, or ..... :		P
	- to the extent in Figure 3, shall be constructed with baffles as specified in Figure 2, or ..... :		N/A
	- be made of metal, perforated as specified in Table 6, or ..... :		N/A
	- be a metal screen with a mesh not exceeding 2 mm × 2 mm centre to centre and a wire diameter of at least 0,45 mm .. :		N/A
	The sides shall have no openings within the area that is included within the inclined line C in Figure 3 or..... :		N/A
	Case and baffle or flame barrier ..... :		N/A

IEC 60255-27			
Clause	Requirement – Test	Result – Remark	Verdict
7.11	Assessment of the fire risk due to a single-fault condition		-
7.11.1	Guidelines for maximum acceptable temperatures when subjecting a circuit or component to a single-fault condition		P
7.11.2	Temperature of windings under a normal condition or a single-fault condition	(See appended table 7.3 and 5.2)	P
7.11.3	Compliance of equipment with requirements for protection against the spread of fire		P
7.12	Limited-energy circuit	Not applied.	N/A
	a) Potential not more than 33 r.m.s. or 70 V dc		N/A
	b) Current limited by one of following means:		N/A
	3) Inherently or by impedance (see Table 8); or		N/A
	4) Overcurrent protective device (see Table 9); or		N/A
	5) A regulating network limits also in single fault condition (see Table 8)		N/A
	c) Is separated by at least basic insulation		N/A
	Fuse or a nonadjustable electromechanical device is used		N/A
8	**General and fundamental design requirements for safety**		**-**
8.1	Climatic conditions for safety		P
	Environmental ranges declared by the manufacturer:		P
	- temperature, operation and storage..... :		P
	- humidity, non-condensing ..... :		P
	- atmospheric pressure ..... :		P
8.2	Electrical connections		P
	- electrical terminations and connection points..... :		P
	- protective bonding..... :	(See appended table 10.6.4.5)	P
	- wires and cables ..... :		P
	- Conductors ..... :		P
	- electrical connections ..... :		P
8.3	Components		-
8.3.1	General	(See appended table 8.3)	P
8.3.2	High-integrity part or component		P

IEC 60255-27			
Clause	Requirement – Test	Result – Remark	Verdict
8.4	Connection to telecommunication networks Requirements according to IEC 62151 ..... :	Not connect to telecommunication networks	N/A
8.5	Connection to other equipment Requirements in accordance with Table A.1 ..... :		P
8.6	Laser sources Requirements in accordance with IEC 60825-1 ..... :	No such device.	N/A
8.7	Explosion		-
8.7.1	General ..... :		P
8.7.2	Components at risk of explosion		-
8.7.2.1	General ..... :	(see clause 5.2.4.5)	P
8.7.2.2	Batteries	No battery used	N/A
	Compliance with Annex F ..... :		N/A
	Marking and warning ..... :		N/A
	Rechargeable batteries ..... :		N/A
	Battery compartment ..... :		N/A
	Batteries intended to be replaced by the user..... :		N/A
9	**Marking, documentation and packaging**		**-**
9.1	Marking		
9.1.1	General		P
	Removable parts .....:		P
	Symbols according to table 9.. .....:		P
	Rack or panel equipment .....:		P
	Voltages, currents, frequency and their tolerances according to IEC 60255-6.....:		P
9.1.2	Identification		-
	Equipment is identified on the equipment by ..... :		P
	a) Manufacturer's or supplier's name or trademark		P
	b) Model or type reference .....:		P
	Manufacturing location identified ..... :		P
9.1.3	Auxiliary supplies, VT, CT, I/O9	No such device.	-
9.1.3.1	General requirements for marking		
	For marking the following should be taken into account:		N/A
	a) a.c. – with symbol 2 of Table 9 and rated frequency or frequency range ..... :		N/A
	b) d.c. – with symbol 1 of Table 9 ..... :		N/A

IEC 60255-27			
Clause	Requirement – Test	Result – Remark	Verdict
	c) symbol 3 of Table 9 on equipment for a.c. and d.c. supply ..... :		N/A
	d) symbol 4 of Table 9 on equipment for 3 phase a.c. supply ..... :		N/A
	e) a hyphen (-) shall be used to separate the lower and upper nominal voltages, for example, 125 V-230 V ..... :		N/A
	f) for measurands either a hyphen (-) or an ellipse (…) shall be used to separate the lower and upper voltages..... :		N/A
	g) for selectable voltage or current markings:		N/A
	- the lower and upper selectable values shall be separated by means of a solidus, i.e. forward slash (/) ..... :		N/A
	- voltages or frequencies where switching is automatic then the markings shall be according to symbol 15 of Table 9 or the word “AUTO” ..... :		N/A
	- operating voltage achieved using an external, separate device, use +EXT.R. ... :		N/A
	h) the burden in watts (active power) or volt-amperes (apparent power) or the rated input current, with all accessories or plug-in modules connected :		N/A
	The documentation shall specify the burden..... :		N/A
	The measured value shall not exceed the marked value by more than 10 % ..... :		N/A
	i) the rated supply voltage(s) or the rated supply voltage range ..... :		N/A
	- voltage range more than 20 % of the mean value..... :		N/A
	- different rated supply voltages ..... :		N/A
9.1.3.2	Auxiliary supply		-
	The following information shall be provided:		-
	a) on the equipment and in the documentation..... :		
	- -a.c. and/or d.c. supply ..... :		
	- the rated values ..... :		
	b) in the documentation..... :		
	- the burden..... :		
9.1.3.3	Measurands		-
	The following information shall be provided:		N/A

IEC 60255-27			
Clause	Requirement – Test	Result – Remark	Verdict
	a) on the equipment and in the documentation..... :		N/A
	- the nominal values, for example, voltage, current, frequency..... :		N/A
	b) in the documentation..... :		N/A
	- the burden..... :		N/A
	- the overload withstand ..... :		N/A
9.1.3.4	Inputs		-
	The following information shall be provided in the documentation ..... :		N/A
	a) a.c. and/or d.c. supply ..... :		N/A
	b) the rated values..... :		N/A
	c) burden on the supply input..... :		N/A
9.1.3.5	Outputs		-
	The following information shall be provided in the documentation ..... :		N/A
	a) the kind of output, for example, relay, optocoupler etc..... :		N/A
	b) burden on the supply input ..... :		N/A
	c) the switching capability on/off ..... :		N/A
	d) the switching voltage..... :		N/A
	e) the permissible current, continuous value and short time value for 1 s ..... :		N/A
	f) withstand voltage across open contacts..... :		N/A
9.1.4	Fuses	No such device used.	-
	Operator replaceable fuse marking ..... :		N/A
	Not replaceable by the user ..... :		N/A
9.1.5	Measuring circuit terminals		-
	Marking shall be adjacent to the measuring terminals ..... :		N/A
	If insufficient space, symbol 14 used..... :		N/A
	Symbol 14 and/or 12 of Table 9 ..... :		N/A
	Voltage 33 V a.c. or 70 V d.c. ..... :		N/A
	Exceptions ..... :		N/A
9.1.6	Terminals and operating devices		-
	Safety markings ..... :		P
	AC or d.c. supply ..... :		P
	Operating device markings ..... :		P

IEC 60255-27			
Clause	Requirement – Test	Result – Remark	Verdict
	Functional earth terminals ..... :		N/A
	Protective conductor terminals..... :		P
	Marking place ..... :		P
	Plug/socket device..... :		P
	Marking for accessible terminals..... :		P
	Marking for lasers or high-intensity infra-red diodes of class 2 rating or higher ..... :		N/A
9.1.7	Equipment protected by double or reinforced insulation..... :		N/A
9.1.8	Batteries		-
9.1.8.1	Replaceable batteries..... :	No battery used.	N/A
	Battery accessible to the user ..... :		N/A
	Battery not accessible to the user..... :		N/A
	Polarity of the battery..... :		N/A
9.1.8.2	Charging ..... :		N/A
9.1.9	Test voltage marking ..... :		N/A
9.1.10	Warning markings		-
	Rack- or panel-mounted equipment ..... :	Wall mounted equipment.	P
	Access in normal use ..... :		P
	Equipment documentation ..... :		P
	Batteries..... :		N/A
	Warning markings size ..... :		N/A
9.1.11	Marking durability ..... :		P
9.2	Documentation		-
9.2.1	General ..... :		P
	Explanation of warning symbols ..... :		P
	Protective conductor connections..... :		P
	Equipment ratings, operating instructions and installation instructions ..... :		P
	Information specified in 9.2.2 to 9.2.5..... :		P
	Intended use ..... :		P
9.2.2	Equipment ratings	See rating label	-
9.2.2.1	General		P
	Overvoltage category .....:	OVC III for MAINS; OVC II for PV	P
	Rated voltage(s) or voltage range(s) (V) .....:		P

IEC 60255-27			
Clause	Requirement – Test	Result – Remark	Verdict
	Rated frequency or rated frequency range (Hz) ....:		P
	Rated power (W) rated current (mA or A) .....:		P
	Nominal functional value .....:		P
	Input and output connections .....:		P
9.2.2.2	Fuses and external protective devices		-
	Fuse ratings ..... :		N/A
	External device ..... :	According to user manual the circuit breaker should use in final Installation.	P
9.2.2.3	Environmental requirement		-
	IP rating..... :	IP66	P
	Pollution degree ..... :	PD2 (Inside); PD3 (Outside)	P
	Insulation class..... :	Class I	P
9.2.3	Equipment installation		-
	Safe mounting..... :		P
	Protective earthing..... :		P
	Ventilation requirements..... :		P
	Digital input circuits and output relays ..... :		N/A
	Wire..... :		P
	External devices ..... :		P
9.2.4	Equipment commissioning and maintenance		-
	Fault-finding and repair ..... :		P
	Equipment part ..... :		P
	Safe methods for changing and disposal of:		
	Accessible fuses..... :		N/A
	Replaceable batteries..... :		N/A
	Re-charging and/or replacement for re-chargeable batteries ..... :		N/A
	Fibre-optic output devices ..... :		N/A
9.2.5	Equipment operation		-
	Operating instructions:		
	- CT circuits ..... :		N/A
	- Responsibility of the user ..... :		P
	- pictures and symbols used ..... :		P
9.3	Packaging		P
10	**Type tests and routine tests**		-

IEC 60255-27			
Clause	Requirement – Test	Result – Remark	Verdict
10.1	General ..... :		P
10.2	Safety type tests ..... :		P
10.3	Routine testing or sample testing ..... :		N/A
10.4	Conditions for testing..... :	Considered.	P
10.5	Verification procedure..... :	Considered.	P
10.6	Tests		-
10.6.1	Climatic environmental tests		-
10.6.1.1	Dry-heat test – operational. Tests according to IEC 60255-1 ..... :	Test Bd of IEC60068-2-2 60℃,16h.	P
10.6.1.2	Cold test – operational. Tests according to IEC 60255-1 ..... :	Test Bd of IEC60068-2-1 -30℃, 16h.	P
10.6.1.3	Dry heat test at maximum storage temperature. Tests according to IEC 60255-1 ..... :	Test Bb of IEC60068-2-2 70℃, 16h	P
10.6.1.4	Cold test at minimum storage temperature. Tests according to IEC 60255-1 ..... :	Test Bd of IEC60068-2-1 -40℃, 16h	P
10.6.1.5	Damp-heat test. Tests according to IEC 60255-1..... :	Test Cab of IEC60068-2-78 40℃, 93%, 10d	P
10.6.1.6	Cyclic temperature with humidity test. Tests according to IEC 60255-1..... :	Test Db: IEC 60068-2-30	P
10.6.2	Mechanical tests	See attachment 1: Vibration, Shock, Bump, Seismic test report	-
10.6.2.1	Vibration Tests according to IEC 60255-21-1..... :	1. Frequency: 10-150Hz; 2. Acceleration:1g; 3. Cycle Time:8 min / axis, total 20 cycles / axis; 4. Direction: X, Y ,Z axis.	P
10.6.2.2	Shock Tests according to IEC 60255-21-2..... :	1. Acceleration: 15g 2. Duration: 11ms; 3. Times: 3 times / direction, total 18 times, 4.Direction: ±X, ±Y , ±Z axis.	P
10.6.2.3	Bump Tests according to IEC 60255-21-2..... :	1. Acceleration: 10g 2. Duration: 16ms; 3. Number: 1000 times / direction. 4. Direction: ±X, ±Y , ±Z axis.	P

IEC 60255-27			
Clause	Requirement – Test	Result – Remark	Verdict
10.6.2.4	Seismic Tests according to IEC 60255-21-3..... :	1.Frequency: 1-35Hz; 2. Cross-over Frequency: 8-9Hz; 3. Horizontal (X, Y): Peak Displacement : 3.5mm; Acceleration: 1.0g; 4. Vertical (Z); 5. Cycle time: 10 min/ axis; 6. Direction: X, Y ,Z axis.	P
10.6.2.5	Accessible parts test	(See clause 5.1.5)	P
10.6.2.6	Dust/water ingress protection Tests according to IEC 60529 ..... :	IP 66	P
10.6.3	Clearances and creepage distances		-
	Compliance with Annex C ..... :	(see appended table 10.6.3)	P
	Compliance with clause 5.1.10.2.2..... :	(see appended table 10.6.3)	P
	Transient suppressor used to reduce the overvoltage. Tests according to IEC 60255-26..... :		N/A
10.6.4	Safety-related electrical tests		-
10.6.4.1	General ..... :		P
10.6.4.2	Impulse voltage test		-
10.6.4.2.1	General ..... :		P
10.6.4.2.2	Test procedures..... :		P
10.6.4.2.3	Waveform and generator characteristics..... :		P
10.6.4.2.4	Selection of impulse test voltage ..... :		P
10.6.4.2.4.1	General ..... :		P
	Altitudes(m) ..... :		P
10.6.4.2.4.2	Equipment to tested at 5 kV peak nominal		P
10.6.4.2.4.3	Equipment to tested at 1 kV peak nominal		N/A
	- auxiliary (power supply) circuits ..... :		N/A
	- equipment power supply ..... :		N/A
	- I/O circuits ..... :		N/A
10.6.4.2.5	Performing of tests		P
	test performed between the followings part:	(see appended table 10.6.4.2)	P

IEC 60255-27			
Clause	Requirement – Test	Result – Remark	Verdict
	- between each circuit specified for the same impulse voltage ..... :		P
	- between independent circuits ..... :		P
	- across the terminals of a given circuit..... :		P
	Equipment with an insulated case..... :		P
10.6.4.2.6	Test acceptance criteria		-
	During the tests ..... :		P
	After the tests ..... :		P
10.6.4.2.7	Repetition of the impulse voltage test ..... :		P
10.6.4.3	AC or d.c. dielectric voltage test		-
10.6.4.3.1	General..... :		P
10.6.4.3.2	Performing the dielectric voltage test ..... :	(see appended table 10.6.4.3)	-
10.6.4.3.2.1	Type tests		-
	test performed between the followings part:		P
	- between each circuit and the accessible conductive parts ..... :		P
	- between independent circuits ..... :		P
	- dielectric voltage withstand, for open metallic contacts..... :		P
10.6.4.3.2.2	Routine tests..... :		N/A
10.6.4.3.2.3	Routine tests by sampling ..... :		N/A
10.6.4.3.3	Value of the dielectric test voltage..... :		P
10.6.4.3.4	Test voltage source ..... :		P
10.6.4.3.5	Test method..... :		P
10.6.4.3.6	Test acceptance criteria ..... :		P
10.6.4.3.7	Repetition of the dielectric voltage test..... :		P
10.6.4.4	Insulation resistance..... :	(See appended table 10.6.4.4)	P
10.6.4.5	Protective bonding tests	(See appended table 10.6.4.5)	P
10.6.5	Electrical environment and flammability		-
10.6.5.1	Maximum temperature of parts and materials..... :		P
10.6.5.2	Flammability of insulating materials, components and fire enclosures ..... :	(See appended table 7.6	N/A
10.6.5.3	Thermal short-time test		-

IEC 60255-27			
Clause	Requirement – Test	Result – Remark	Verdict
	Overvoltage ..... :		N/A
	Overcurrent..... :		N/A
10.6.5.4	Output relay parameters Parameters in according to IEC 60255-26 ..... :		N/A
10.6.5.5	Single-fault condition ..... :		N/A
10.6.6	Reverse polarity and slow ramp test ..... :	(See appended table 5.2)	P

IEC 60255-27			
Clause	Requirement – Test	Result – Remark	Verdict

A	**ANNEX A, ISOLATION CLASS REQUIREMENTS AND EXAMPLE DIAGRAMS (NORMATIVE) (see 5.1.2; 5.1.6.2; 5.1.10)**	P

B	**ANNEX B, RATED IMPULSE VOLTAGES (NORMATIVE) (see 5.1.2.2)**	**P**

C	**ANNEX C, GUIDANCE FOR THE DETERMINATION OF CLEARANCE, CREEPAGE DISTANCE AND WITHSTAND VOLTAGES (NORMATIVE) (see 5.1.2.2; 5.1.4; 5.1.10; 10.6.3)**	**P**

D	**ANNEX D, COMPONENTS (INFORMATIVE) (see 7.4.1; 8.3; 8.7.1)**	**P**

E	**ANNEX E, EXTERNAL WIRING TERMINATIONS (NORMATIVE) (see 6.3)**		-
E.1	General		P
E.2	Permanently connected equipment		P
	a) a set of terminals; or		P
	b) a non-detachable power supply cable.		N/A
	terminals ..... :		P
	screws and nuts ..... :		P
	power supply cables:		N/A
	a) two independent fixings..... :		N/A
	b) mechanical fixing of the cables ..... :		N/A
E.3	Conductors		N/A
	Connection of conductors in compliance with Table E1. ..... :		N/A
E.4	Terminals		P
	Contact pressure size in compliance with Table E2. ..... :		P
	Terminals contact pressure..... :		P
	Slipping of the conductor..... :		P
	Terminals shall be so fixed that when the means of clamping the conductor is tightened or loosened:		P
	a) the terminal itself does not work loose ..... :		P
	b) internal wiring is not subjected to stress..... :		P
	Ordinary non-detachable power supply cables ..... :		N/A
	c) creepage distances and clearances are not reduced below the values specified in Annex C. ..... :		P

IEC 60255-27			
Clause	Requirement – Test	Result – Remark	Verdict
F	**ANNEX F, EXAMPLES OF BATTERY PROTECTION (INFORMATIVE) (see 8.7.2.2)**		**N/A**

IEC 60255-27

5.2	TABLE: Fault condition tests						P
No.	component No.	fault	test voltage (V)	test time	fuse No.	fuse current (A)	Comments/ Observation
1	BUS C65	S/C	Input: 850Vdc Output: 540Vac(L-L)	30min	--	--	FID:Inverter shut down.IGBT6,IGBT7,IGBT8 damaged
2	BUS C69	S/C	Input: 850Vdc Output: 540Vac(L-L)	30min	--	--	FID:Inverter shut down.IGBT6,IGBT7,IGBT8 damaged
3	IGBT 8 Q3 pin D-G	S/C	Input: 850Vdc Output: 540Vac(L-L)	30min	--	--	FID:Inverter shut down.IGBT6,IGBT7,IGBT8 damaged
4	IGBT 8 Q3 pin D-E	S/C	Input: 850Vdc Output: 540Vac(L-L)	30min	--	--	FID:Inverter shut down.IGBT6,IGBT7,IGBT8 damaged
5	IGBT 8 Q3 pin G-E	S/C	Input: 850Vdc Output: 540Vac(L-L)	30min	--	--	FID:Inverter shut down.IGBT6,IGBT7,IGBT8 damaged
6	BOOST 8 G-S	S/C	Input: 850Vdc Output: 540Vac(L-L)	30min	--	--	FID:PV8 Boost cannot work,LCD cannot display PV8 current
7	T4 pin 9-12	S/C	Input: 850Vdc Output: 540Vac(L-L)	30min	--	--	FID:Inverter shut down. System without auxiliary power supply
8	T4 pin 4-5	S/C	Input: 850Vdc Output: 540Vac(L-L)	30min	--	--	FID:Inverter shut down. System without auxiliary power supply
9	R778	S/C	Input: 850Vdc Output: 540Vac(L-L)	30min	--	--	FID:Inverter shut down. LCD display “IsoFault” fault.
10	U22 pin 3-4	S/C	Input: 850Vdc Output: 540Vac(L-L)	30min	--	--	FID:Inverter shut down. System without auxiliary power supply
11	Q58 pin 1-2	S/C	Input: 850Vdc Output: 540Vac(L-L)	30min	--	--	FID:Inverter shut down. System without auxiliary power supply
12	Q58 pin 2-3	S/C	Input: 850Vdc Output: 540Vac(L-L)	30min	--	--	FID:Inverter shut down. System without auxiliary power supply
13	Q58 pin 1-3	S/C	Input: 850Vdc Output: 540Vac(L-L)	30min	--	--	FID:Inverter shut down. System without auxiliary power supply
14	U5 Vcc - Vout	S/C	Input: 850Vdc Output: 540Vac(L-L)	30min	--	--	FID:Inverter shut down. LCD display “Branch current offset Error” fault
15	Q3 Pin S-D	S/C	Input: 850Vdc Output: 540Vac(L-L)	30min	--	--	FID:Inverter work normally.
16	Q3 Pin G-D	S/C	Input: 850Vdc Output: 540Vac(L-L)	30min	--	--	FID:Inverter work normally.

IEC 60255-27

17	Q3 Pin S-G	S/C	Input: 850Vdc Output: 540Vac(L-L)	30min	--	--	FID:Inverter work normally.
18	Q6 pin B-C	S/C	Input: 850Vdc Output: 540Vac(L-L)	30min	--	--	FID:Inverter cannot start. LCD display “RelayFail” fault.
19	Q6 pin E-C	S/C	Input: 850Vdc Output: 540Vac(L-L)	30min	--	--	FID:Inverter cannot start. LCD display “RelayFail” fault.
20	EC4	S/C	Input: 850Vdc Output: 540Vac(L-L)	30min	--	--	FID:Inverter shut down.IGBT6,IGBT7,IGBT8 damaged
21	AC output	S/C	Input: 850Vdc Output: 540Vac(L-L)	30min	--	--	FID:Inverter shut down,LCD display “HwAcOCP”fault.
22	AC output	Reverse	Input: 850Vdc Output: 540Vac(L-L)	30min	--	--	FID:Inverter work normally.
23	DC input	S/C	Input: 850Vdc Output: 540Vac(L-L)	30min	--	--	FID:Inverter shut down, Inverter cannot start.
24	DC input	Reverse	Input: 850Vdc Output: 540Vac(L-L)	30min	--	--	FID:Inverter cannot start.
25	Fan	Lock	Input: 850Vdc Output: 540Vac(L-L)	30min	--	--	FID:Inverter work normally.LCD display “FAN alarm” fault.
26	Temperature sampling	Failure	Input: 850Vdc Output: 540Vac(L-L)	30min	--	--	FID:Inverter shut down.LCD display “TempFault”.

supplementary information
During the test:
Fire do not propagate beyond the EUT;
Equipment do not emitt molten metal;
Enclosures do not deform to cause non-compliance with the standard.
Pass the dielectric test.

7.3	**TABLE: Heating Test**		P
	test voltage (V) :	See below	—
	t1 (°C) :	See below	—
	t2 (°C) :	See below	—

Thermocouple Locations	Max. temperature measured (°C)				Max. temperature limit (°C)
Test by model : Hiverter Si-136K-HV					
Test voltage	Input: 850Vdc	Input: 550Vdc	Input: 850Vdc	Input: 550Vdc	--
Capacitance C70	73.8	76.9	78.5	84.9	105
Capacitance C33	72	74.6	77.5	84.6	105
IGBT driver board CN3	71.7	75.4	77.3	83.8	130
Current sensor surface U6	71.1	75.2	76.9	84.3	100

IEC 60255-27

PCB near IGBT (IGBT3)	71.4	75.2	77.0	84.0	130
PV terminal	59.6	63.7	68.8	73.1	95
PV wire	72.6	75.9	77.7	86.1	95
AC wire	78.8	80.6	81.1	87.4	105
AC terminal	73.3	75.3	78.1	84.3	105
Electrolytic capacitor EC6	75.1	76.7	79.2	85.6	105
Fan	72	73.6	77.6	84.1	-
Relay RY3	74.1	76	79.2	85.4	-
Filter capacitor C26	73.2	74.1	78.4	84.8	105
Current sensor	80	81.8	81.9	88.4	100
Inductance 1	91	91.9	87.8	94.3	110
Inductance 1	79.1	80.7	81.4	87.8	110
Lightning protection	79.6	81.3	81.8	88.0	-
Relay	77.6	79.5	80.6	86.9	-
Current sensor	77.4	78.7	80.6	86.8	100
Transformer coil	81	82.5	85.9	92.3	110
Transformer core	78.5	80.3	83.5	89.7	110
PCB near Q1	77.5	78.6	82.1	88.7	130
LCD board PCB	72.2	73.2	77.6	84.0	130
Coil	73.8	75.4	78.8	85.4	110
Core	74.6	75.7	79.8	86.3	110
Optocoupler	74.3	75.8	79.4	85.9	100
PCB near chip	71.3	73.7	76.6	83.0	130
PV switch	52.6	58.3	63.7	66.1	95
Display	61.9	63.1	70.9	74.9	95
Encolsure	62.1	63.8	67.0	68.1	70
Ambient	45	45	60.0	60.0	-
Test by model Hiverter Si-110K					
Test voltage	Input: 850Vdc	Input: 500Vdc	Input: 850Vdc	Input: 500Vdc	--
Power board					
Capacitance C19	65.6	62.2	81.1	77.8	105
Capacitance C20	64.7	71.2	80.1	87.5	105
Capacitance C49	68.2	68.1	83.4	84.4	105
IGBT9 BOOST	63.5	72.5	78.7	89.5	110
IGBT8 INV	54.3	90.1	70.0	108.8	110

IEC 60255-27

PV9 BOOST inductance	107.8	100.8	107.8	105.7	110
Capacitance C16	62.0	63.4	77.0	79.3	105
Capacitance C102	60.1	61.5	74.9	77.2	105
Capacitance C60	72.9	68.3	87.7	84.4	105
U1	66.2	63.0	81.5	78.6	130
PV1 BOOST inductor	65.5	71.2	80.2	87.0	110
Output board					
Capacitance C1	69.7	65.1	84.9	80.6	105
Capacitance C54	63.8	60.9	78.9	76.6	105
SPD4 SPD	61.8	59.6	76.8	75.2	-
Capacitance C3	74.0	67.0	88.4	82.4	105
Relay RY5	63.2	61.1	78.5	76.7	-
Capacitance C40	64.7	61.6	80.2	77.4	105
Capacitance C45	61.4	59.2	76.2	74.7	105
Capacitance C58	62.0	60.1	77.0	75.8	105
Inductance L5	68.1	63.4	82.9	79.1	110
EUT					
PV1 input power line	63.4	65.5	78.2	81.4	85
PV10 input power line	57.4	57.9	72.2	73.5	85
PV1 input connector	59.9	59.8	74.2	75.4	95
MOV3 (lightning protection board)	58.3	58.5	73.1	73.9	-
Display buttons	50.4	49.6	65.8	65.1	95
PV terminal	46.2	47.5	61.7	63.3	95
Front of the case	54.9	53.0	69.4	68.6	70
Side of the case	49.7	49.8	64.3	65.5	70
EC1 (capacitor board)	68.0	65.3	81.6	80.4	105
Common mode inductor coil L2	75.5	66.6	90.2	82.5	110
Differential mode inductor coil L3	101.2	81.4	105.7	95.4	110
DC switch	46.2	46.8	61.4	62.5	95
Output power line	62.3	60.1	77.3	75.7	85
Output terminal	51.6	51.9	67.3	67.8	95
Transformer T4 (control board)	71.3	66.4	84.5	81.7	110
Transformer T6 (control board)	76.3	71.2	89.8	86.0	110
Inverter inductance T	50.3	52.9	65.8	68.8	110
Ambient	45.0	45.0	60.0	60.0	-

IEC 60255-27

	TABLE: Heating test, resistance method				
	Test voltage (V) ..... :				—
	Ambient, t_1 (°C) ..... :				—
	Ambient, t_2 (°C) ..... :				—
Temperature rise of winding	**R_1 (Ω)**	**R_2 (Ω)**	**ΔT (K)**	**Max. dT (K)**	**Insulation class**
Supplementary information: Virtual ground used for the test.					

7.6	**TABLE: Flammability of materials and components**				**N/A**
Object/ Part No./ Material	Manufacturer/ trademark	Duration of application of test flame (ta); (s)	Ignition of specified layer Yes/No	Duration of burning (tb) (s)	Verdict
Supplementary information:					

Part	Manufacturer of material	Type of material	Thickness (mm)	Flammability class	Evidence
Supplementary information:					

8.3	**TABLE: Critical components information**				**P**
Component	Manufacturer/ trademark	Type/model	Technical data	Standard	Mark(s) of conformity
DC connector	Stäubli Electrical Connectors Ltd.	MC4 Series	1000Vdc, 39A, Max. 90°C, IP68	EN 50521 UL6703	TUV R60028286 R60087448 E343181
	Amphenol Industrial operations	Helios H4 Series	1000Vdc, 39A, Max. 90°C, IP68	EN 50521 UL6703	TUV R 50157783 UL E339277
Input lead wire	All	All accepted	Min. 2AWG, 2000V, 105°C, VW-1	UL 11627	UL
Output lead wire	All	All accepted	Min. 10AWG, 2000V, 105°C, VW-1	UL 11627	UL
DC Switch	Santon Switchgear Ltd	XBHP+3810/ 2	1200/20A, 800V/40A, Max.85°C	EN 60947-3	71-107727
AC output	Shanghai Huntec Electrical	RBH200A-4P	200A/600Vac,4P	IEC/EN 62109-1 IEC/EN 62109-	Tested with appliance

IEC 60255-27

8.3	TABLE: Critical components information				P
Component	Manufacturer/ trademark	Type/model	Technical data	Standard	Mark(s) of conformity
	Technology Co.,Ltd			2	
	Shanghai Found Automation Co.,Ltd	FCNH-4P	200A/600Vac,4P	IEC/EN 62109-1 IEC/EN 62109-2	Tested with appliance
All PCB	All	All accepted	Min.130°C, min. V-0, CTI≥175	UL 796	UL
Gas Discharge Tube (GAS1)	Shenzhen Bencent Electronics ltd	B8G1500M	1200~1800Vdc，-40~90℃	UL1449	UL E337906
Output on-grid Relay(RY3, RY4, RY5, RY6, RY7, RY8)	Xiamen Hongfa Electroacoustic Co.,Ltd	HF167F-200	HF167F-200,1A,200A,12V, 30000cycles	TUV EN61810-12005	UL E133481
Output Current sensor(HCT3,HCT4,HCT5)	Sinomages Technology Co.,Ltd	STB-200LA/ZN	CURRENT SENSOR,STB-200LA/ZN, 5V, 200A ,-40～105℃, DIP-9P	UL508	UL E507664
Y1-Cap (C7, C8, C9, C10, C4, C5, C6)	Samwha	SDE2G472M15BW1	Y1/4.7nF/400VAC/Y5U/P10.0	UL:EN60384-14:2005 VDE:EN60384-14:2013	E97754 40015804
SPD (SPD1,SPD2, SPD3, SPD4)	Zhongguang Hi-tech	ZGGS20-670PVh1b1	510VAC/670VDC/10kA	UL1449	E339436
Boost IGBT Module	ON-Semi	NXH100B120H3Q0SG	1200V, 50A	---	---
	Vincotech Electronic Gmbh	V23990-P629-L57Y-PM	1200V, 50A	UL1557	E192116
INV IGBT Module	ON-Semi	NXH450N65L4Q2F2SG	650V ,450A	---	---
	Vincotech Electronic Gmbh	30-PT07NIB300S503-LH36F58Y	650V ,450A	UL1557	E192116
BUS Electrolytic Capacitor	SamYoung	TLS550VS470(M)(Φ35x60L)	470uF/550V/Φ35*60/3000H	IEC/EN 62109-1 IEC/EN 62109-2	Tested with appliance
	nichicon	LGN2L471MELANH	470uF/550V/Φ35*60/3000H	IEC/EN 62109-1 IEC/EN 62109-2	Tested with appliance
Optical	LITE-ON	LTV816S2TP	Isolation	DIN EN 60747-	VDE 40015248

IEC 60255-27

8.3	TABLE: Critical components information				P
Component	Manufacturer/ trademark	Type/model	Technical data	Standard	Mark(s) of conformity
Coupler(U9, U15, U19, U20, U21, U22)	TECHNOLOGY CORPORATION	B-V	voltage:5000Vrms 110°C	5-5	
	TOSHIBA Corporation	TLP785F(D4 GRT7.F(C	Isolation voltage:5000Vrms 85°C	UL1577	UL E67349
Driver Transformer	Huizhou baohui electro-tech ltd	115-19-066B	Class B,130°C	IEC/EN 62109-1 IEC/EN 62109-2	Tested with appliance
X2 CAP	Xiamen Faratronic Electroacoustic Co.,Ltd	C4BG2335K B1C350	Film Cap,X2,3.3uF,±10 %,400VAC,110°C	UL-CUL 60384-14	UL E186600
ISO Relay	Xiamen Hongfa Electroacoustic Co.,Ltd	HFD3/5	5Vdc/2A/30Vdc	UL508 VDE:EN41003	CUL:E133481 VDE:40018867
Input Current sensor	LEM Electronics (China)Co.,Ltd	HLSR 20-P	Current Sensor,HLSR 20-P,5V,20A,-40~105°C,RoHS	UL508:2010	UL E189713
Boost inductor	HeFei Yunlu Juneng Electric Co.,Ltd	100KW BOOST1	650uH/70*40*56mm	IEC/EN 62109-1 IEC/EN 62109-2	Tested with appliance
	Shenzhen Jingquanhua Electronics Co.,Ltd		650uH/70*40*56mm	IEC/EN 62109-1 IEC/EN 62109-2	Tested with appliance
	ECRIEE-TAMURA ELECTRIC CO.,LTD		650uH/70*40*56mm	IEC/EN 62109-1 IEC/EN 62109-2	Tested with appliance
INV inductor	HeFei Yunlu Juneng Electric Co.,Ltd	100KW INV1	105uH/65x50x21 mm	IEC/EN 62109-1 IEC/EN 62109-2	Tested with appliance
	Shenzhen Jingquanhua Electronics Co.,Ltd		105uH/65x50x21 mm	IEC/EN 62109-1 IEC/EN 62109-2	Tested with appliance
	ECRIEE-TAMURA ELECTRIC CO.,LTD		105uH/65x50x21 mm	IEC/EN 62109-1 IEC/EN 62109-2	Tested with appliance
Output	Shenzhen SPT electro-tech ltd	SPT-85H10443-L	712uH,±25%,0.64 mΩ,3L	IEC/EN 62109-1	Tested with appliance

IEC 60255-27

8.3	TABLE: Critical components information				P
Component	Manufacturer/ trademark	Type/model	Technical data	Standard	Mark(s) of conformity
Common-mode inductor (L2)				IEC/EN 62109-2	
	CHINA AMORPHOUS TECHNOLOGY CO.,LTD	CA01-12161	712uH,±25%,0.64 mΩ,3L	IEC/EN 62109-1 IEC/EN 62109-2	Tested with appliance
Output Differential-mode inductor (L3)	Shenzhen SPT electro-tech ltd	SPT-80F10444-L	5.6uH,±20%,0.4mΩ,3L	IEC/EN 62109-1 IEC/EN 62109-2	Tested with appliance
	CHINA AMORPHOUS TECHNOLOGY CO.,LTD	CA02-10736	5.6uH,±20%,0.4mΩ,3L	IEC/EN 62109-1 IEC/EN 62109-2	Tested with appliance
Aux Power Transformer	Huizhou baohui electro-tech ltd	115-19-085D	0.46mH,ETD39-12P	IEC/EN 62109-1 IEC/EN 62109-2	Tested with appliance
Interior DC Fans	MinebeaMitsumi Inc	12038VA24QFUE1	24V,5200rpm,40000at60℃, 120*120*38	cULus File NO.UL507 VDE File NO EN60950-1	UL:E89936 VDE:150733
	DELTA ELECTRONICS ,INC.	DBPJ1238B4GP002	24V,1.32A,7000rpm, ROHS,120*120*38	cULus File NO.UL507 TUV:EN60950-1	UL:E132003 TUV:R50156481
External DC Fans	MinebeaMitsumi Inc	09238DE24PCUE1	24V,1.5A,10000rpm, 92*92*38mm,IP68	cULus File NO.UL507 VDE File NO EN60950-1	UL:E89936 VDE:150733
	DELTA ELECTRONICS ,INC.	THD0924HEGDA	24VDC,10700rpm ,92*92*38,IP68	cULus File NO.UL507 TUV:EN60950-1	UL:E132003 TUV:R50156481

10.6.3	TABLE: Clearance and creepage distance measurements					P
clearance cl and creepage distance dcr at / of:	Up (V)	U r.m.s. (V)	required cl (mm)	cl (mm)	required dcr (mm)	dcr (mm)
Between PV+ and PV- on PV board (BI)	1100 Vdc	312 Vac	5.5	5.68	5.6	5.68
Between PV+ and Ground on PV board (BI)	1100 Vdc	312 Vac	5.5	5.63	5.6	5.63
Between PV- and Ground on PV board (BI)	1100 Vdc	312 Vac	5.5	5.65	5.6	5.65
Between AC L and AC N on AC board (BI)	1100 Vdc	312 Vac	5.5	5.62	5.6	5.62
Between AC and Ground on AC board (BI)	1100 Vdc	312 Vac	5.5	5.83	5.6	5.83
Between live part and enclosure (BI)	1100 Vdc	312 Vac	5.5	5.83	11.0	14.33

IEC 60255-27

Between primary and secondary of optocoupler on communication board U20 (RI)	250Vac	250Vac	5.5	6.4	5.5	6.59
Between primary and secondary of optocoupler on communication board U13 (RI)	250Vac	250Vac	5.5	6.77	5.5	8.03

Note(s): *, BI=basic insulation, RI=reinforced insulation. When determine the clearance:
For DC input circuits: Overvoltage Category II applied(impulse withstand voltage 6000V)
For AC output circuits (connected to AC mains): Overvoltage Category III applied (impulse withstand voltage 6000V considered.).
For the inner layer of the PCB, pollution II was considered.
Requirement about creepage distances for the distance to the metal enclosure come from columns 7 of Table 11.
The voltage across optocoupler on communication board does not exceed 250Vac
PCB with min. CTI 175 used.
Consider the maximum working altitude of the machine is 2000m.

10.6.4.2/ 10.6.4.3	**TABLE: Impulse voltage test/Dielectric Strength**			**P**
test voltage applied between:	test voltage (Vdc)	impulse withstand voltage (V)	partial discharge extinction voltage (V)	result
PV input and Ground (BI)	2545Vdc	6000V	N/A	No breakdown
PV input and communication output port(RI)	5049Vdc	8000V	N/A	No breakdown
AC mains output and Ground (BI)	2545Vdc	6000V	N/A	No breakdown
AC mains and communication output port(RI)	5049Vdc	8000V	N/A	No breakdown
Supplementary information:				

10.6.4.4	**TABLE: insulation resistance measurements**	**P**
Insulation resistance R between:	R (MΩ)	Required R (MΩ)
Between mains poles (primary fuse disconnected)	>100	10
Between parts separated by basic or supplementary insulation	>100	10
Between parts separated by double or reinforced insulation	>100	10
Supplementary information:		

10.6.4.5	**TABLE: resistance of bonding conductors and their terminations**		**P**
Accessible conductive part	Test current (A) 20x1'	Voltage drop (V)	Calculated Resistance (Ω)
PE to Enclosure	20	1.2	0.06

IEC 60255-27

Supplementary information:			

List of test equipment used:

No	Test Equipment	Equipment model	Equipment No.	Calibration due date
1	Simulation of ac power supply	WLPA-33-1000KVA	BZ-DGD-L001	--
2	Solar IV simulator	WDGC-1000KW	BZ-DGD-L002	--
3	Programmable ac load	ACLT-38160H	BZ-DGD-L003	--
4	Power analyser	PW6001-16	BZ-DGD-L025	2021\3\25
5	Oscilloscope	MSO4054B	BZ-DGD-L028	2021\3\24
6	Heating Recorder	LR8400-21	BZ-DGD-L032	2021\8\27
7	Hi-Pot & IR tester	Chroma 19032	BZ-DGD-L066	2021\4\25
8	Noise meter	TES-1357	BZ-DGD-L029	2021\3\09
9	Digital Caliper	LS160	BZ-DGD-L048	2021\3\09
10	Testing Finger B	AUTO-B	BZ-DGD-L011	2020\11\1
11	DC Electronic Load	IT8511+	BZ-DGD -L027	2020\10\31
12	Pull and push	2P-1000	BZ-DGB-L080	2021\8\27
13	Electronic Scale	TCS-300	BZ-DGB-L020	2021\3\09
14	Thermostat	16m³	BZ-DGD-L015	2021\3\09
15	Surge generator	HCWG 70	BZ-DGE-L036	2021\5\05
16	Electromagnetic vibration table	ES-20-321	BZ-DGB-L026-1	2021\9\08
17	Impact table	SY11-50	BZ-DGB-L069	2021\3\03

- End of Test Report -